APPROVED
COMMISSIONER OF HUMAN RESOURCES

Meeting of November 19, 2019 RESOLUTION P-16-19

WHEREAS, The 2019 Budget, adopted October 30, 2018 established the titles and salaries of officers and employees of the Town of Oyster Bay pursuant to Section 27 of Town Law, and other Local Laws relating to the establishment of Town Departments, and Rules and Regulations governing appointments, etc., of employees; and

WHEREAS, The adoption of said 2019 Budget, on October 30, 2018, was by a Resolution of the Town Board; and

WHEREAS, Resolution #P1063, dated December 12, 1972, provides a procedure for the amendment of the Resolution establishing grades, salaries and titles as required and requested by Department Heads,

NOW, THEREFORE, BE IT RESOLVED, That the Budget as adopted be and hereby is amended to reflect the approved additions and deletions as indicated by the attached.

The foregoing resolution was declared adopted after a poll of the members of the Board; the vote being recorded as follows:

Supervisor Saladino	Aye
Councilman Muscarella	Aye
Councilman Macagnone	Nay
Councilwoman Johnson	Aye
Councilman Imbroto	Aye
Councilman Hand	Aye
Councilman Labriola	Aye

Meeting of November 19, 2019 Resolution No. TF-19-2019

RESOLVED, That the Comptroller be and he hereby is directed to Transfer Funds within the various Departments Accounts as indicated:

ITEM NO.	DEPT.	AMOUNT	FROM
090-19	DHR	$500.00	DHR A 1430 44100 000 0000
			TO
		$500.00	DHR A 1430 47900 000 0000
			FROM
091-19	HWY	$1,000.00	HWY DB 5110 12000 000 0000
			TO
		$1,000.00	HWY DB 5110 25000 000 0000
			FROM
092-19	HWY	$14,000.00	HWY DB 5110 12000 000 0000
			TO
		$14,000.00	HWY DB 5110 41710 000 0000
			FROM
093-19	HWY	$583.00	HWY DB 5110 41400 000 0000
			TO
		$583.00	HWY DB 5110 41600 000 0000
			FROM
		$200.00	HWY DB 5110 41730 000 0000
			TO
		$200.00	HWY DB 5110 41600 000 0000
			FROM
		$500.00	HWY DB 5110 41770 000 0000
			TO
		$500.00	HWY DB 5110 41600 000 0000
			FROM
		$463.38	HWY DB 5110 44900 000 0000
			TO
		$463.38	HWY DB 5110 41600 000 0000
			FROM
094-19	HWY	$3,200.00	HWY ST 5650 42200 000 0000
			TO
		$3,200.00	HWY ST 5650 41300 000 0000

Reviewed By
Office of Town Attorney

095-19	PKS	$4,200.00	FROM PKS SP07 7989 42200 000 0000
		$4,200.00	TO PKS SP07 7989 46300 000 0000
		$5,100.00	FROM PKS SP11 7989 42200 000 0000
		$5,100.00	TO PKS SP11 7180 41600 000 0000
		$4,200.00	FROM PKS SP11 7989 42200 000 0000
		$4,200.00	TO PKS SP11 7989 46300 000 0000
096-19	DER	$80,000.00	FROM DER SR05 8160 11000 000 0000
		$80,000.00	TO DER SR05 8160 44800 000 0000
		$50,000.00	FROM DER SR05 8160 12000 000 0000
		$50,000.00	TO DER SR05 8160 44800 000 0000
097-19	DPW	$160,000.00	FROM DPW A 1640 41230 000 0000
		$160,000.00	TO DPW A 1640 46420 000 0000
098-19	PAD	$35,000.00	FROM PAD B 3620 11000 000 0000
		$35,000.00	TO PAD B 8020 44800 000 0000
099-19	CYS	$2,000.00	FROM CYS A 7020 47660 000 0000
		$2,000.00	TO CYS A 7020 22000 000 0000
		$2,000.00	FROM CYS A 7020 47660 000 0000
		$2,000.00	TO CYS A 7020 46100 000 0000
100-19	ROT	$20,000.00	FROM ROT A 1330 11000 000 0000
		$20,000.00	TO ROT A 1330 41300 000 0000

			FROM
101-19	HWY	$100.00	HWY SL 5182 46100 000 0000
			TO
		$100.00	HWY SL 5182 25000 000 0000
			FROM
102-19	PKS	$10,000.00	PKS A 7110 11000 000 0000
			TO
		$10,000.00	PKS A 7110 46200 000 0000

#

The foregoing resolution was declared adopted after a poll of the members of the Board; the vote being recorded as follows:

Supervisor Saladino	Aye
Councilman Muscarella	Aye
Councilman Macagnone	Aye
Councilwoman Johnson	Aye
Councilman Imbroto	Aye
Councilman Hand	Aye
Councilman Labriola	Aye

2A

TOWN OF OYSTER BAY
Inter-Departmental Memorandum

To: **MEMORANDUM DOCKET**

From: ELIZABETH L. MACCARONE, COMMISSIONER
DEPARTMENT OF PLANNING AND DEVELOPMENT

Date: NOVEMBER 7, 2019

Subject: **TRANSFER OF FUNDS**

Kindly arrange for a transfer of funds as requested from the 2019 budget as follows:

From: PAD B 3620 11000 000 0000----------$35,000.00
SALARIES- REGULAR

To: PAD B 8020 44800 000 0000----------$35,000.00
PROFESSIONAL SERVICES

This transfer is necessary for additional payment for services for Nelson, Pope and Voorhis, LLC.

Elizabeth L. Maccarone
ELIZABETH L. MACCARONE
COMMISSIONER

ELM/dm

C: Legislative Affairs +9 copies

2B

TOWN OF OYSTER BAY
Inter-Departmental Memorandum

November 7, 2019

TO: Memorandum Docket

FROM: Maureen A. Fitzgerald, Commissioner
Department of Community and Youth Services

SUBJECT: Transfer of Funds

The Department of Community and Youth Services requests Town Board authorization to transfer the following funds:

From:	CYS A 7020 47660 000 0000	Special Events	$ 4,000.00
To:	CYS A 7020 22000 000 0000	Other Equipment	$ 2,000.00
	CYS A 7020 46100 000 0000	Equipment Maintenance	$ 2,000.00

The transfer will accommodate the purchase of a Fellowes shredder to replace one that is broken and cannot be repaired. The transfer will also cover the repair of a projector and movie screen used for Music Under the Stars and other special events.

Maureen A. Fitzgerald
Maureen A. Fitzgerald
Commissioner

MAF:iw
cc: Town Attorney (+9 copies)

2C

TOWN OF OYSTER BAY

Office of the Receiver of Taxes

INTER-DEPARTMENTAL MEMO

TO: **MEMORANDUM DOCKET**

FROM: **JAMES J. STEFANICH, RECEIVER OF TAXES**

RE: **TRANSFER OF FUNDS**

DATE: **November 7, 2019**

The below transfer of funds is hereby requested so that the Receiver has funds available for new tax bill envelopes for the incoming Receiver of Taxes:

FROM:	ROT A 1330 11000 000 0000	SALARIES-REGULAR	$20,000.00
TO:	ROT A 1330 41300 000 0000	OFFICE SUPPLIES	$20,000.00

James J. Stefanich, Receiver of Taxes

Town Attorney (Original + 9 copies)

2D

TOWN OF OYSTER BAY
Inter-Departmental Memo

November 6, 2019

TO: **MEMORANDUM DOCKET**

FROM: **JOHN P. BISHOP, DEPUTY COMMISSIONER**
HIGHWAY DEPARTMENT

SUBJECT: TRANSFER OF FUNDS

Town Board authorization is requested to transfer the following funds:

	Account No.	Object Description	Amount
From:	HWY SL 5182 46100 000 0000	EQUIPMENT MAINTENANCE	$100.00
To:	HWY SL 5182 25000 000 0000	GENERAL EQUIPMENT	$100.00

This transfer is necessary to purchase one (1) Locator Tracker.

John P. Bishop, Deputy Commissioner
Highway Department

JPB/dp

C: Town Attorney (9)
Comptroller's Office
Richard Lenz, P.E., Commissioner of DPW/Highway

2E

TOWN OF OYSTER BAY

Inter-Departmental Memo

November 8, 2019

TO: **MEMORANDUM DOCKET**

FROM: **JUSTIN McCAFFREY, COMMISSIONER, PUBLIC SAFETY**

Subject: **TRANSFER OF FUNDS**

Town Board authorization is hereby requested for the following transfer of funds:

FROM:	TO:
DPS A 3010 41600 000 0000 MATERIALS AND SUPPLIES $1450.00	DPS A 3010 41400 000 0000 UNIFORMS $1450.00
DPS A 3010 46320 000 0000 INSTALL/REMOVE NAV AIDS $200.00	DPS A 3010 41400 000 0000 UNIFORMS $200.00
DPS A 3010 46300 000 0000 BUILDING/PROP MAINT $800.00	DPS A 3010 41400 000 0000 UNIFORMS $800.00

The above transfers to the uniform account are necessary to outfit additional personnel with winter weight personal flotation jackets.

Justin McCaffrey, Commissioner
Department of Public Safety

C: Town Attorney (9)
Comptroller's Office

2F

TOWN OF OYSTER BAY

Inter-Departmental Memorandum

TO: Memorandum Docket

FROM: Joseph G. Pinto, Commissioner
Department of Parks

DATE: November 8, 2019

SUBJECT: 2019 TRANSFER OF FUNDS

Town Board authorization is hereby requesting that the Comptroller transfer the following:

FROM:

PKS-A-7110-11000-000-0000	Salaries Regular	$10,000.00

TO:

PKS-A-7110-46200-000-0000	Credit Card Fees	$10,000.00

This transfer is being requested to provide funds necessary for additional credit card fees.

Joseph G. Pinto
Commissioner

JGP:GS:ld
CC: Town Attorney (original +9 copies)

2A

TOWN OF OYSTER BAY

Inter-Departmental Memorandum

TO: Memorandum Docket

FROM: Joseph G. Pinto, Commissioner
Department of Parks

DATE: November 1, 2019

SUBJECT: 2019 Transfer of Funds

Town Board authorization is hereby requesting that the Comptroller transfer the following:

FROM:		
PKS-SP07-7989-42200-000-0000	Light, Power & Water	$4,200.00
PKS-SP11-7989-42200-000-0000	Light, Power & Water	$5,100.00
PKS-SP11-7989-42200-000-0000	Light, Power & Water	$4,200.00
TO:		
PKS-SP07-7989-46300-000-0000	Building, Property Maintenance	$4,200.00
PKS-SP11-7180-41600-000-0000	Materials & Supplies	$5,100.00
PKS-SP11-7989-46300-000-0000	Building, Property Maintenance	$4,200.00

This transfer is being requested to provide funds necessary for Building, Property Maintenance and Materials & Supplies.

Joseph G. Pinto
Commissioner

JGP:dim
cc: Town Attorney (+ 9 copies)

2B

Town of Oyster Bay
Inter-Departmental Memo

November 4, 2019

To: Memorandum Docket

From: Robert Darienzo, Director of Finance

Subject: Transfer of Funds

In order to provide funds for engineering services in the Solid Waste Disposal District, the following transfer of funds is hereby requested:

Transfer from:

DER	SR05	8160	11000	000	0000	Salaries – Regular	$ 80,000.00
DER	SR05	8160	12000	000	0000	Salaries – Part Time	$ 50,000.00

Transfer to:

DER	SR05	8160	44800	000	0000	Professional Services	$ 130,000.00

Thank you.

Robert Darienzo
Director of Finance

RD/rd
cc: Town Attorney (with 9 copies)
Word/Documents/Docket/TOF 2019 DER

2C

TOWN OF OYSTER BAY
INTER-DEPARTMENTAL MEMO

November 4, 2019

TO : MEMORANDUM DOCKET

FROM : RICHARD W. LENZ, P.E., COMMISSIONER OF DPW/HIGHWAY

SUBJECT : **AMENDMENT TO THE 2019 OPERATING BUDGET**

Kindly arrange to transfer funds for the C.V.M. Division as follows:

ACCOUNT NO.	OBJECT DESCRIPTION	AMOUNT
FROM:		
DPW A-1640-41230-000-0000	PARTS	$ 160,000.00
TO:		
DPW A-1640-46420-000-0000	OUTSIDE REPAIR	$ 160,000.00

This transfer is necessary to provide sufficient funds for outside repair of Town Vehicles.

RICHARD W. LENZ, P.E.
COMMISSIONER OF DPW/HIGHWAY

RWL/MC/sb
C: Town Attorney – Original and 9 copies
Steven C. Ballas, Comptroller
Michael Cipriano, Division Head/CVM
Robert Tassone, Storekeeper

1280

2A
10-29-19

Town of Oyster Bay
Inter-Departmental Memo

October 23, 2019

To: Memorandum Docket

From: John Canning, Commissioner of Human Resources

Subject: Transfer of Funds

In order to provide funds to purchase Seniority Pins in the Department of Human Resources, the following transfer of funds is hereby requested:

Transfer from:							
DHR	A	1430	44100	000	0000	Printing Public & Legal Notices	$ 500.00
Transfer to:							
DHR	A	1430	47900	000	0000	Other Expenses	$ 500.00

Thank you,

John Canning
Commissioner of Human Resources

cc: Town Attorney (with 9 copies)

ZB 10-29-19

1280

TOWN OF OYSTER BAY
Inter-Departmental Memo

October 18, 2019

TO: **MEMORANDUM DOCKET**

FROM: **JOHN P. BISHOP, DEPUTY COMMISSIONER**
HIGHWAY DEPARTMENT

SUBJECT: TRANSFER OF FUNDS

Town Board authorization is requested to transfer the following funds:

	Account No.	Object Description	Amount
From:	HWY DB 5110 12000 000 0000	SALARIES PART TIME	$1,000.00
To:	HWY DB 5110 25000 000 0000	EQUIPMENT	$1,000.00

This transfer is necessary to purchase one (1) Olympus Digital Camera and one (1) Impact Wrench.

John Bishop

John P. Bishop, Deputy Commissioner
Highway Department

JPB/dp

C: Town Attorney (9)
Comptroller's Office
Richard Lenz, P.E., Commissioner of DPW/Highway

2C
10-29-19

1280

TOWN OF OYSTER BAY
Inter-Departmental Memo

October 23, 2019

TO: **MEMORANDUM DOCKET**

FROM: **JOHN P. BISHOP, DEPUTY COMMISSIONER**
HIGHWAY DEPARTMENT

SUBJECT: TRANSFER OF FUNDS

Town Board authorization is requested to transfer the following funds:

	Account No.	Object Description	Amount
From:	HWY DB 5110 12000 000 0000	SALARIES PART TIME	$14,000.00
To:	HWY DB 5110 41710 000 0000	SIGN SUPPLES	$14,000.00

This transfer is necessary to purchase Thermoplastic Turn Arrow and Straight Arrow Sign Letters.

John Bishop

John P. Bishop, Deputy Commissioner
Highway Department

JPB/dp

C: Town Attorney (9)
Comptroller's Office
Richard Lenz, P.E., Commissioner of DPW/Highway

2D
10-29-19

1280

TOWN OF OYSTER BAY
Inter-Departmental Memo

October 18, 2019

TO: **MEMORANDUM DOCKET**

FROM: **JOHN P. BISHOP, DEPUTY COMMISSIONER**
HIGHWAY DEPARTMENT

SUBJECT: TRANSFER OF FUNDS

Town Board authorization is requested to transfer the following funds:

	Account No.	Object Description	Amount
From:	HWY DB 5110 41400 000 0000	UNIFORMS	$583.00
	HWY DB 5110 41730 000 0000	ASPHALT	$200.00
	HWY DB 5110 41770 000 0000	SAND, STONE & GRAVEL	$500.00
	HWY DB 5110 44900 000 0000	OTHER CONTRACTS	$463.38
To:	HWY DB 5110 41600 000 0000	MATERIALS & SUPPLIES	$1,746.38

This transfer is necessary to purchase propane, acetylene, and oxygen.

John Bishop JP

John P. Bishop, Deputy Commissioner
Highway Department

JPB/dp

C: Town Attorney (9)
Comptroller's Office
Richard Lenz, P.E., Commissioner of DPW/Highway

2E
10-29-19

1280

TOWN OF OYSTER BAY
Inter-Departmental Memo

October 26, 2019

TO: **MEMORANDUM DOCKET**

FROM: **JOHN P. BISHOP, DEPUTY COMMISSIONER**
HIGHWAY DEPARTMENT

SUBJECT: TRANSFER OF FUNDS

Town Board authorization is requested to transfer the following funds:

	Account No.	Object Description	Amount
From:	HWY ST 5650 42200 000 0000	LIGHT, POWER & WATER	$3,200.00
To:	HWY ST 5650 41300 000 0000	OFFICE SUPPLIES	$3,200.00

This transfer is necessary to purchase Public Parking Permits.

John P. Bishop, Deputy Commissioner
Highway Department

JPB/dp

C: Town Attorney (9)
Comptroller's Office
Richard Lenz, P.E., Commissioner of DPW/Highway

Meeting of November 19, 2019 Resolution No. 676-2019

WHEREAS, Sergeant Joseph Gaffney, Nassau County Police Marine and Aviation Bureau, Foot of First Avenue, East Rockaway, New York 11518, by letter dated September 26, 2019, requested the use of one slip at Tappen Marina for a Nassau County patrol boat and one slip at Theodore Roosevelt Marina for a Nassau County patrol boat for the 2019-2020 winter season; and

WHEREAS, Joseph G. Pinto, Commissioner, Department of Parks, by memorandum dated October 17, 2019, requested Town Board authorization to permit the Nassau County Police Marine Bureau to berth one marine enforcement boat at Harry Tappen Marina and one marine enforcement boat at Theodore Roosevelt Marina, for the 2019-2020 winter season at no cost to Nassau County; and

WHEREAS, the Town Board deems this to be appropriate and beneficial to the general public, as well as a crime deterrent for the protection of the Town marinas.

NOW, THEREFORE, BE IT RESOLVED, That the request is hereby accepted and approved, and the Department of Parks is hereby authorized to permit the Nassau County Police Marine and Aviation Bureau to berth one marine enforcement boat at Harry Tappen Marina and one marine enforcement boat at Theodore Roosevelt Marina for the 2019-2020 winter season, without cost.

#

Reviewed By
Office of Town Attorney

The foregoing resolution was declared adopted after a poll of the members of the Board; the vote being recorded as follows:

Supervisor Saladino	Aye
Councilman Muscarella	Aye
Councilman Macagnone	Aye
Councilwoman Johnson	Aye
Councilman Imbroto	Aye
Councilman Hand	Aye
Councilman Labriola	Aye

5

TOWN OF OYSTER BAY

Inter-Departmental Memorandum

TO: Memorandum Docket

FROM: Joseph G. Pinto, Commissioner of Parks

DATE: October 17, 2019

SUBJECT: Winter berthing NCPD vessels Tappen and Roosevelt Marinas

Town Board authorization is requested for the Nassau County Police Marine Bureau to berth one marine enforcement boat at both Harry Tappen Marina and Theodore Roosevelt Marina for the 2019-2020 winter season at no cost to Nassau County.

The presence of the Nassau County Marine Bureau within each of the two marinas is not only beneficial to the general public, but also a crime deterrent for the protection of the town marinas. This Department recommends that the Town Board waive the winter season berth fee for the Nassau County Police Marine Bureau boats.

Joseph G. Pinto
Commissioner of Parks

JGP/gmv
Cc: Town Attorney (+9 copies w/attach)

Nassau County **Police Department**

LAURA CURRAN
COUNTY EXECUTIVE

1490 Franklin Avenue
Mineola, New York 11501
(516) 573-8800

PATRICK J. RYDER
POLICE COMMISSIONER

September 26, 2019

Commissioner Joseph G. Pinto
Department of Parks
Town of Oyster Bay
977 Hicksville Rd. Massapequa, NY 11758

Dear Commissioner Pinto,

The Nassau County Marine bureau is in the process of planning the deployment of our North Shore patrol vessels for this upcoming winter. In the past we have secured a slip for a patrol vessel in Tappen Marina and another slip for a patrol vessel in Roosevelt Park Marina. This season we would like to continue with this deployment and are requesting authorization to maintain one slip in Tappen and another in Roosevelt Park Marina for our patrol vessels.

Thank you for your consideration with this request.

Sincerely,

Sergeant Joseph Gaffney
Nassau County Police
Marine and Aviation Bureau
Foot of First Avenue
East Rockaway, NY 11518
516-573-4450

WHEREAS, Joseph G. Pinto, Commissioner, Department of Parks, by memorandum dated October 17, 2019, requested Town Board authorization to establish the attached Fee Schedule for Harry Tappen and Theodore Roosevelt Marinas, Spring, Summer and Fall for the 2020 season,

NOW, THEREFORE, BE IT RESOLVED, That the Town Board hereby approves the attached 2020 Harry Tappen and Theodore Roosevelt Marinas, Spring, Summer and Fall Fee Schedule for the 2020 season, and authorizes the Department of Parks to establish and collect said fees.

-#-

Reviewed By
Office of Town Attorney

The foregoing resolution was declared adopted after a poll of the members of the Board; the vote being recorded as follows:

Supervisor Saladino	Aye
Councilman Muscarella	Aye
Councilman Macagnone	Aye
Councilwoman Johnson	Aye
Councilman Imbroto	Aye
Councilman Hand	Aye
Councilman Labriola	Aye

6

TOWN OF OYSTER BAY

Inter-Departmental Memorandum

To: Memorandum Docket

From: Joseph G. Pinto, Commissioner of Parks

Date: October 17, 2019

Subject: Harry Tappen/Theodore Roosevelt Marinas, Spring, Summer, & Fall Fee Schedule – 2020

It is requested that Town Board approval be given to implement the attached Harry Tappen/Theodore Roosevelt Marinas Spring, Summer, and Fall fee schedule for the 2020 season.

There are no increases in fee amounts from the prior year.

Joseph G. Pinto
Commissioner of Parks

JGP:gmv

cc: Town Attorney (+9 copies)
Gabrielle Pontillo, Parks Finance

Attachments

HARRY TAPPEN/THEODORE ROOSEVELT MARINAS
SPRING, SUMMER AND FALL FEE SCHEDULE - 2020

Seasonal rental fee:

Roosevelt Marina
Resident - 20' and up - Without electric - $90.00 per foot
Resident - 20' and up - With electric - $97.50 per foot

Tappen Marina
Resident - 14' to 17' - Without electric - $45.00 per foot
Non-Resident - 14' to 17' - Without electric - $60.00 per foot
Resident - 18' to 20' - Without electric - $60.00 per foot
Resident - 18' to 20' - With electric - $67.50 per foot
Non-Resident - 18' to 20' - Without electric - $75.00 per foot
Non-Resident - 18' to 20' - With electric - $87.50 per foot
Resident - 21' to 24' - Without electric - $65.00 per foot
Resident - 21' to 24' - With electric - $72.50 per foot
Non-Resident - 21' to 24' - Without electric - $80.00 per foot
Non-Resident - 21' to 24' - With electric - $92.50 per foot
Resident - 25' and up - Without electric - $70.00 per foot
Resident - 25' and up - With electric - $77.50 per foot
Non-Resident - 25' and up - Without electric - $85.00 per foot
Non-Resident - 25' and up - With electric - $97.50 per foot

Prorate fee:
Persons who are contacted by the Beach Division office on or after June 11, 2020, for slip availability will be eligible for a prorated fee. The fee will be determined by the full cost of a slip rental for appropriate vessel size divided by 151. 151 represents the number of days after June 11 through November 8. The prorate date will, in all cases, be the date that the Beach Division first made contact with the person with actual slip availability. This same prorate formula will be used for slip holders who upgrade to electric use or purchase a larger vessel during the season.

Senior Citizen Discount:
Persons who were born on or before November 8, 1960 are entitled to a discount of 10% on their marina fee.

The Department of Parks will reserve two boats slips at Harry Tappen Marina and one slip at Theodore Roosevelt Memorial Marina for use by the Nassau County Police Marine Bureau at no charge.

Transient Fee - (Tappen Marina only):

1. Weekly

Resident - 20 foot and under - $85.00 per week
Over 20 foot - $150.00 per week

Non-resident - 20 foot and under - $150.00 per week
Over 20 foot - $200.00 per week

a. Minimum payment is for a seven (7) day period.
b. Weekly transient fee is valid from June 1, 2020 until November 8, 2020. Maximum length of stay is any combination of four (4) weeks.
c. Vessels must vacate the marina by 8 a.m. on the day after their authorization has expired.
d. All payments must be made at Town Hall South.
e. The Parks Department reserves the right to have any transient vessel vacate the marina after a seven (7) day stay.

2. Daily

Resident and Non-Resident - $20.00

a. This rate will be applied to all boats from sunup to sundown or any portion thereof.
b. This fee will be applied from April 13, 2019 to November 8, 2019.

Seasonal rental of sailing dinghy/canoe/kayak racks:

Resident - $150.00
Non-resident - $300.00

Limit one vessel per rack except for kayaks. Limit two kayaks per rack.

The Commissioner of Parks reserves the right to amend the above for the benefit of operations.

Meeting of November 19, 2019 Resolution No. 678-2019

WHEREAS, John Canning, Commissioner, Department of Human Resources, by memorandum dated October 17, 2019, requested that the Comptroller be authorized and directed to refund the following health insurance policy premiums, in connection with the Town of Oyster Bay Flexible Spending 125 Plan, for individuals who passed away during the first quarter of 2019:

Retiree Name	Date of Death	Beneficiary Name	Premium Amount Due
Martin P. Abruzzo	January 26, 2019	Lauren Abruzzo	$499.40
Richard T. Betz	February 27, 2019	Sharon Betz	$622.00

Approved By
Office of Town Attorney

NOW, THEREFORE, BE IT RESOLVED, That the request as hereinabove set forth is hereby accepted and approved, and the Comptroller is hereby authorized and directed to refund to the employees' beneficiaries named herein, in connection with the Town of Oyster Bay Flexible Spending 125 Plan, upon presentation of a duly certified claim, after audit; and be it further

RESOLVED, That the funds for said payment are to be drawn from Account No. TWN TA 0000 00020 400 0000.

#

The foregoing resolution was declared adopted after a poll of the members of the Board; the vote being recorded as follows:

Supervisor Saladino	Aye
Councilman Muscarella	Aye
Councilman Macagnone	Aye
Councilwoman Johnson	Aye
Councilman Imbroto	Aye
Councilman Hand	Aye
Councilman Labriola	Aye

9

Town of Oyster Bay

Inter-Departmental Memo

TO: Memorandum Docket

FROM: John Canning, Commissioner
Department of Human Resources

DATE: October 17, 2019

SUBJECT: **Town of Oyster Bay Section 125 Flexible Spending Plan**
Standard Life Premium Refunds

The following employees have retired from employment with the Town of Oyster Bay. They had opted to continue coverage in the Standard Life Managerial Life Insurance policy. Retirees who remain in the plan must pay the premiums for the entire year at the beginning of the calendar year. These retirees have passed away during the first quarter of 2019 and are due a refund for the balance of the year.

Retiree Name	Date of Death	Beneficiary Name	Premium Amount Due
Martin P. Abruzzo	January 26, 2019	Lauren Abruzzo	$499.40
Richard T. Betz	February 27, 2019	Sharon Betz	$622.00

Therefore, it is hereby requested that the Town Board authorize and direct the Town Comptroller to refund the premium contributions to the above-referenced beneficiaries from Account No. TWN TA 0000 00020 400 0000 upon submission of a duly certified claim form and after audit by the Comptroller.

John Canning
Commissioner

cc: Town Attorney's office (w/9 copies)

Town of Oyster Bay
DEPARTMENT OF HUMAN RESOURCES
54 AUDREY AVENUE OYSTER BAY, NY 11771-1592

John Canning
Commissioner

Vicki Spinelli
Deputy Commissioner

(516) 624-6425
FAX: (516) 624-6489
www.oysterbaytown.com

December 31, 2018

Mr. Richard Betz
25 Croyden Avenue
Massapequa, NY 11758

Dear Mr. Betz:

Re: Managerial Life Insurance with Standard Life

The Town of Oyster Bay's agreement with the Standard Life Insurance Company has been continued at the guaranteed rate of $.454 per thousand from January 1, 2019 through December 31, 2019. You are currently insured for $137,000.00 per year and your monthly premium will be $62.20 per month or $746.40 per year.

Your prompt payment of $746.40 is due upon receipt of this letter in order to provide continuation of coverage. Please make your check payable to "Supervisor, Town of Oyster Bay."

Thank you for your courtesy and cooperation in this matter. Should you have any questions or comments, please feel free to call Christine Wieczorek of my staff at (516) 624-6427.

Sincerely,

JOHN CANNING
Commissioner
Department of Human Resources

JC:cw

cc: Joe Carbone
Payroll Department

PAID 1/5/19
CHECK # 2784
$746.40

TOWN OF OYSTER BAY

PAYMENTS TO THE SUPERVISOR

Department Human Resources Date 1/28 20 19

This statement to accompany payments to the Supervisor stating when, from whom and for what use monies were received.

Check No.	Dated	Amount		Credit Account	Received From	Description
1198	1/4/19	441	36	[illegible]	RICHARD PFRENDNER	[illegible] LIFE INS. PREMIU
1184	1/4/19	362	72	TOWN-TA-0000-0020-400	JOHN VENDITTO	"
1196	1/10/19	294	24	TOWN-TA-0000-0020-400	MICHAEL RICH	"
3169	1/7/19	572	04	TOWN-TA-0000-0020-400	LOUIS [illegible]	"
2184	1/5/19	742	40	TOWN-TA-0000-0020-400	RICHARD PETZ	"
0415	1/8/19	610	20	TOWN-TA-0000-0020-400	ERIC SODERSON	"
3000	1/5/19	800	88	TOWN-TA-0000-0020-400	ROBERT MCEVOY	"
1054	1/6/19	309	64	TOWN-TA-0000-0020-400	DIANNE BROWN	"
2452	1/5/19	745	16	TOWN-TA-0000-0020-400	CAROL CLARK	"
[illegible]	1/7/19	574	[illegible]	TOWN-TA-0000-0020-400	JOHN [illegible]	"
2791	1/4/19	544	[illegible]	TOWN-TA-0000-0020-400	[illegible]	"
1001	1/5/19	794	68	TOWN-TA-0000-0020-400	BRUCE [illegible]	"
1010	1/4/19	207	12	TOWN-TA-0000-0020-400	MARYANNE JACKSON	"
[illegible]	1/11/19	490	32	TOWN-TA-0000-0020-400	IRENE VAN LOAN	"
5445	1/9/19	245	52	TOWN-TA-0000-0020-400	CARL [illegible]	"
5541	1/10/19	620	20	TOWN-TA-0000-0020-400	[illegible]	"
	Total					

I hereby certify that the sum of $ 8,126.28 as described above was all the monies received by me for the Town of Oyster Bay

CHRISTINE WIECZOREK — Name — SECRETARY — Title

Received $ 8126.28 by the Supervisor on 1/28 20 19 ROB DARIENZO (RS) — Name — DIR OF FINANCE — Title

Distribution: 1. White - Supervisor's Copy 2. Canary - Comptroller's Copy 3. Blue - Department Copy Supervisor to Receipt & Return

Town of Oyster Bay
DEPARTMENT OF HUMAN RESOURCES
54 AUDREY AVENUE OYSTER BAY, NY 11771-1592

John Canning
Commissioner

Vicki Spinelli
Deputy Commissioner

(516) 624-6425
FAX: (516) 624-6489
www.oysterbaytown.com

December 31, 2018

Martin Abruzzo, Esq.
14 Madison Avenue
Jericho, NY 11753

Dear Mr. Abruzzo:

Re: Managerial Life Insurance with Standard Life

The Town of Oyster Bay's agreement with the Standard Life Insurance Company has been continued at the guaranteed rate of $.454 per thousand from January 1, 2019 through December 31, 2019. You are currently insured for $100,000.00 per year and your monthly premium will be $45.40 per month or $544.80 per year.

Your prompt payment of $544.80 is due upon receipt of this letter in order to provide continuation of coverage. Please make your check payable to "Supervisor, Town of Oyster Bay."

Thank you for your courtesy and cooperation in this matter. Should you have any questions or comments, please feel free to call Christine Wieczorek of my staff at (516) 624-6427.

Sincerely,

JOHN CANNING
Commissioner
Department of Human Resources

JC:cw

cc: Joe Carbone
Payroll Department

PAID 1/4/19
CHECK #3791
$544.80

TOWN OF OYSTER BAY

PAYMENTS TO THE SUPERVISOR

Department Human Resources Date 1/28 20 19

This statement to accompany payments to the Supervisor stating when, from whom and for what use monies were received.

Check No.	Dated	Amount		Credit Account	Received From	Description
[illegible]	1/4/19	441	36	[illegible]	RICHARD PARENDORF	[illegible] LIFE INS. PREMIUM
1126	1/4/19	762	72	TOWN-TA-000-0020-400	JOHN VENDITTO	"
8156	1/4/19	244	24	TOWN-TA-000-0020-400	MICHAEL RICH	"
2101	1/7/19	512	04	TOWN-TA-000-0020-400	LUCIA WINKLER	"
5184	1/8/19	740	40	TOWN-TA-000-0020-400	RICHARD BETZ	"
0945	1/8/19	610	20	TOWN-TA-000-0020-400	ERIC SOERENSON	"
3000	1/5/19	800	88	TOWN-TA-000-0020-400	ROBERT MCEVOY	"
1824	1/6/19	259	64	TOWN-TA-000-0020-400	DIANNE BROWN	"
3452	1/8/19	245	16	TOWN-TA-000-0020-400	CAROL CLARK	"
[illegible]	1/7/19	[illegible]	[illegible]	TOWN-TA-000-0020-400	JOHN FORNARO	"
3771	1/4/19	544	20	TOWN-TA-000-0020-400	HOLLIN PERUZZO	"
1001	1/8/19	724	68	TOWN-TA-000-0020-400	BRUCE [illegible]	"
1010	1/10/19	207	12	TOWN-TA-000-0020-400	MARYANNE JACKSON	"
3151	1/11/19	490	32	TOWN-TA-000-0020-400	ARLENE VAN LUIN	"
5442	1/11/19	244	52	TOWN-TA-000-0020-400	GARY BRIGGS	"
5541	1/10/19	600	20	TOWN-TA-000-0020-400	MARYANN HUGHES	"
	Total					

I hereby certify that the sum of $ 8,126.28 as described above was all the monies received by me for the Town of Oyster Bay

CHRISTINE WIEZOREK — Name — SECRETARY — Title

Received $ 8126.28 by the Supervisor on 1/28 20 19 ROB DARIENZO (RS) — Name — DIR OF FINANCE — Title

Distribution: 1. White - Supervisor's Copy 2. Canary - Comptroller's Copy 3. Blue - Department Copy Supervisor to Receipt & Return

TOWN OF OYSTER BAY

INTER-DEPARTMENTAL MEMORANDUM

September 5, 2019

TO : JOSEPH NOCELLA, TOWN ATTORNEY
ATT : RALPH P. HEALEY, SPECIAL COUNSEL

FROM : STEVEN C. BALLAS, COMPTROLLER

SUBJECT: ESTATE OF MARTIN ABRUZZO

This is in response to your memo dated August 30, 2019 concerning monies owed to the estate of former Town of Oyster Bay part-time employee, Martin Abruzzo. After reviewing your memo and the accompanying letter from Lauren Abruzzo, Executor of his estate and beneficiary, I would like to explain some of the issues addressed. In regards to any reimbursement of Mr. Abruzzo's life insurance policy, that inquiry should be directed to our Human Resources Department who handles employee benefits and insurances.

It has always been the policy of our office that when an employee deceases and monies are owed, Human Resources would supply our office with the name and address of the designated beneficiary to be used in any correspondence to the Town Attorney's office. Enclosed is Mr. Abruzzo's notarized form designating Lauren Abruzzo his beneficiary, also please note that had Mr. Abruzzo wanted the monies paid to his Estate there were specific instructions on the form on how that was to be accomplished.

As a result of the information supplied, our February 8, 2019 memo was sent to your office concerning any salary owed to Mr. Abruzzo's designated beneficiary, Lauren Abruzzo. The amount stated of $985.24, included both payroll checks dated January 25, 2019 and February 8, 2019 which represent payment through January 30, 2019. As far as any hold back of pay at the start of Mr. Abruzzo's employment, he received and cashed all checks for his time worked that was certified by his Department Head and processed by this office.

Should any other information be necessary concerning this matter, please feel free to contact the undersigned at 516-624-6459.

STEVEN C. BALLAS
COMPTROLLER

By: Joseph E. Carbone
Joseph E. Carbone
Payroll Supervisor

SCB:JEC

cc: Vicki Spinelli, Deputy Commissioner of Human Resources

TOWN OF OYSTER BAY
CLAIM

AUDREY AVENUE, OYSTER BAY, NEW YORK 11771

TAXPAYER IDENTIFICATION NUMBER
FEDERAL ID # ☐ SOCIAL SECURITY # ☐

CLAIMANT'S NAME Lauren Abruzzo	CONTRACT #	ORDER #
CLAIMANT'S ADDRESS 10 East End Avenue, Apt 3A, New York, NY 10075	CONTRACT NAME	
TOWN DEPARTMENT Human Resources	CLAIMANT INVOICE #	RESO #

FOLLOW INSTRUCTIONS ON REVERSE SIDE THEN RETURN CLAIM AND INVOICES TO DEPARTMENT RECEIVING MATERIALS OR SERVICES

DETAILED DESCRIPTION OF MATERIALS OR SERVICES

DATE	DESCRIPTION	UNIT PRICE	TOTAL
	Refund Standard Life Premium of deceased retiree, Martin P. Abruzzo		$499.40

TOTAL AMOUNT	$499.40
CASH DISCOUNT %	
NET AMOUNT	

THE BELOW CERTIFICATION MUST BE PROPERLY FILLED OUT BY THE CLAIMANT

I HEREBY CERTIFY the above articles were sold and delivered and or the above service rendered to the Town of Oyster Bay on the dates and for the prices or amounts billed; that the above bill is just, true and correct; that no part thereof has been paid except as stated therein and that the balance there stated in the amount of _____ is actually due and owing, and that taxes from which the Town of Oyster Bay is exempt are excluded therefrom.

CLAIMANT FURTHER CERTIFIES that the unit prices charged herein are not higher than those charged to any governmental or commercial consumer for like deliveries.

Date _____

Signature _____ Title _____

Print or type name Lauren Abruzzo Name of Company _____

I HEREBY APPROVE this claim form for the sum of _____ for the services, disbursements and materials herein indicated which were actually performed and were for the Town of Oyster Bay.

Signature _____ Title _____ Date _____

Department _____ Account _____

INSTRUCTIONS

CLAIMANT'S NAME AND ADDRESS - All claimants must print or typewrite their name and address in the space provided for the purpose. The check will be drawn in that name and mailed to that address. Claimant's Taxpayer Identification Number (TIN) must be furnished.

DEPARTMENT OR AGENCY - Indicate the department that received the services or supplies.

TERMS - Show any discounts that are allowed for prompt payment. Cash discount period to commence when claim is received bv the Town Comptroller.

PURCHASE OR WORK ORDER NO. - If a purchase order or work order has been issued for the items charged on this voucher, show the number thereof.

DESCRIPTION OF MATERIALS OR SERVICES - charges must be itemized. In space provided in the body of this voucher, show where applicable: (1) dates of services or delivery; (2) quantities; (3) description of charges; (4) unit price; (5) amount. Where labor is part of the services rendered, indicate rate per hour and the number of hours.

CLAIMANT'S CERTIFICA TION - The claimant's certification must be completed. The date on which the signatures affixed must be given. The title of the person signing must clearly indicate his relationship to the claimant, e.g. sole owner, partner, treasurer, bookkeeper, billing clerk, etc. Notary not required.

DELIVERY RECEIPTS OR INVOICE - Attach to claim original invoice and delivery slips signed by the municipal employee receiving the materials.

RETURN CLAIM VOUCHER AND ORIGINAL INVOICE PRQMPTL Y - In order to expedite payment this claim voucher and original invoice should be returned promptly to the receiving department after the services have been rendered or the materials have been furnished.

TOWN OF OYSTER BAY
CLAIM
AUDREY AVENUE, OYSTER BAY, NEW YORK 11771

TAXPAYER IDENTIFICATION NUMBER
FEDERAL ID # ☐ SOCIAL SECURITY # ☐

CLAIMANT'S NAME Sharon A. Betz	CONTRACT #	ORDER #
CLAIMANT'S ADDRESS 25 Croyden Drive, Massapequa, NY 11758	CONTRACT NAME	
TOWN DEPARTMENT Human Resources	CLAIMANT INVOICE #	RESO #

FOLLOW INSTRUCTIONS ON REVERSE SIDE THEN RETURN CLAIM AND INVOICES TO DEPARTMENT RECEIVING MATERIALS OR SERVICES

DETAILED DESCRIPTION OF MATERIALS OR SERVICES

DATE	DESCRIPTION	UNIT PRICE	TOTAL
	Refund Standard Life Premium of deceased retiree, Richard T. Betz		$622.00

TOTAL AMOUNT	$622.00
CASH DISCOUNT %	
NET AMOUNT	

THE BELOW CERTIFICATION MUST BE PROPERLY FILLED OUT BY THE CLAIMANT

I HEREBY CERTIFY the above articles were sold and delivered and or the above service rendered to the Town of Oyster Bay on the dates and for the prices or amounts billed; that the above bill is just, true and correct; that no part thereof has been paid except as stated therein and that the balance there stated in the amount of _____ is actually due and owing, and that taxes from which the Town of Oyster Bay is exempt are excluded therefrom.

CLAIMANT FURTHER CERTIFIES that the unit prices charged herein are not higher than those charged to any governmental or commercial consumer for like deliveries.

Date _____

Signature _____ Title _____

Print or type name Sharon A. Betz Name of Company _____

I HEREBY APPROVE this claim form for the sum of _____ for the services, disbursements and materials herein indicated which were actually performed and were for the Town of Oyster Bay.

Signature _____ Title _____ Date _____

Department _____ Account _____

INSTRUCTIONS

CLAIMANT'S NAME AND ADDRESS - All claimants must print or typewrite their name and address in the space provided for the purpose. The check will be drawn in that name and mailed to that address. Claimant's Taxpayer Identification Number (TIN) must be furnished.

DEPARTMENT OR AGENCY - Indicate the department that received the services or supplies.

TERMS - Show any discounts that are allowed for prompt payment. Cash discount period to commence when claim is received bv the Town Comptroller.

PURCHASE OR WORK ORDER NO. - If a purchase order or work order has been issued for the items charged on this voucher, show the number thereof.

DESCRIPTION OF MATERIALS OR SERVICES - charges must be itemized. In space provided in the body of this voucher, show where applicable: (1) dates of services or delivery; (2) quantities; (3) description of charges; (4) unit price; (5) amount. Where labor is part of the services rendered, indicate rate per hour and the number of hours.

CLAIMANT'S CERTIFICA TION - The claimant's certification must be completed. The date on which the signatures affixed must be given. The title of the person signing must clearly indicate his relationship to the claimant, e.g. sole owner, partner, treasurer, bookkeeper, billing clerk, etc. Notary not required.

DELIVERY RECEIPTS OR INVOICE - Attach to claim original invoice and delivery slips signed by the municipal employee receiving the materials.

RETURN CLAIM VOUCHER AND ORIGINAL INVOICE PROMPTL Y - In order to expedite payment this claim voucher and original invoice should be returned promptly to the receiving department after the services have been rendered or the materials have been furnished.

TOWN OF OYSTER BAY

PAYMENTS TO THE SUPERVISOR

Department Human Resources Date 1/28 20 19

This statement to accompany payments to the Supervisor stating when, from whom and for what use monies were received.

Check No.	Dated	Amount		Credit Account	Received From	Description
6738	1/4/19	441	36	TOWN·TA·0000·00020·400	RICHARD PFRENDER	2019 STANDARD LIFE INS. PREMIUM
1138	1/4/19	762	72	TOWN·TA·0000·00020·400	JOHN VENDITTO	"
8655	1/4/19	294	24	TOWN·TA·0000·00020·400	MICHAEL RICH	"
3169	1/7/19	572	04	TOWN·TA·0000·00020·400	LOUIS WARNER	"
2784	1/5/19	746	40	TOWN·TA·0000·00020·400	RICHARD PETZ	"
0045	1/8/19	610	20	TOWN·TA·0000·00020·400	ERIC SWENSON	"
3000	1/5/19	800	88	TOWN·TA·0000·00020·400	ROBERT MCEVOY	"
7884	1/6/19	299	64	TOWN·TA·0000·00020·400	WAYNE BROWN	"
3458	1/5/19	245	16	TOWN·TA·0000·00020·400	CAROL CLARK	"
2265	1/7/19	474	00	TOWN·TA·0000·00020·400	JOHN RONCALLO	"
3791	1/4/19	544	80	TOWN·TA·0000·00020·400	MARTIN MORUZZO	"
6601	1/5/19	724	68	TOWN·TA·0000·00020·400	BRUCE FOLEY	"
1010	1/6/19	207	12	TOWN·TA·0000·00020·400	MARYANNE JACKSON	"
8161	1/11/19	490	32	TOWN·TA·0000·00020·400	ARLENE VAN LOAN	"
5442	1/9/19	242	52	TOWN·TA·0000·00020·400	GARY PAPPAS	"
5587	1/10/19	670	20	TOWN·TA·0000·00020·400	MARYANN HUGHES	"
	Total					

I hereby certify that the sum of $ 8,126.28 as described above was all the monies received by me for the Town of Oyster Bay

CHRISTINE WIECZOREK — Name

SECRETARY — Title

Received $ 8126.28 by the Supervisor on 1/28 20 19

ROB DARIENZO (RS) — Name

DIR OF FINANCE — Title

Distribution: 1. White - Supervisor's Copy 2. Canary - Comptroller's Copy 3. Blue - Department Copy Supervisor to Receipt & Return

TOWN OF OYSTER BAY

Inter-Departmental Memo

May 21, 2019

To: Vicki Spinelli

From: Christine Wieczorek

Subject: Standard Life Premium Reimbursements

The following payments need to be processed for the reimbursement of Standard Life Managerial Life Insurance premiums paid by retired employees who have recently passed away. The payment should be taken out of Account TWN-TA-0000-00020-400. Copies of the beneficiary forms are attached.

Retired Employee	Date of Death	Name of Beneficiary	Premium Amt. Due
Martin P. Abruzzo	01/26/2019	Lauren Abruzzo	$499.40
Richard T. Betz	02/27/2019	Sharon Betz	$622.00

The Standard Life Insurance Company of New York **Beneficiary Designation/Change**

This designation will apply to the following The Standard Life Insurance Company of New York coverage(s) if available to you through your Employer: Life Insurance, Life with Accidental Death & Dismemberment (AD&D) Insurance, AD&D Insurance and, unless specified otherwise on a separate signed sheet of paper, Supplemental Life Insurance.

Designations made below, or on a separate sheet of paper, are not valid unless signed, dated, and delivered to your Employer during your lifetime. Return the completed form to your Human Resources Department.

MEMBER/EMPLOYEE INFORMATION

Your Name (Last, First, Middle)		Date of Birth
Abruzzo, Martin P.		[redacted]
Your Address: 14 Madison Avenue		
City: Jericho	State: NY	Zip: 11753
Group Name: Town of Oyster Bay	Group No.: 433783	

BENEFICIARY INFORMATION

- Your designation revokes all prior designations.
- Benefits are payable to a contingent Beneficiary only if you are not survived by one or more primary Beneficiaries.
- If you name two or more Beneficiaries in a class (primary or contingent), two or more surviving Beneficiaries will share equally, unless you provide for unequal shares.

  If a minor (a person not of legal age) or your estate is the Beneficiary, it may be necessary to have a guardian or a legal representative appointed by the court before any death benefit can be paid. If the Beneficiary is a trust or trustee, the written trust must be identified in the Beneficiary designation. For example, "Dorothy Q. Smith, Trustee under the trust agreement dated _____."
- A power of attorney must grant specific authority, by the terms of the document or applicable law, to make or change a Beneficiary designation. If you have questions, consult your legal advisor.
- Dependents Insurance and Supplemental Life Insurance on your Spouse, if any, is payable to you, if living, or as provided under your Employer's coverage under the Group Policy.
- If you complete the "% of Benefit" box(es), the amounts should add up to 100% for each class (primary or contingent). For example, "Primary - John Q. Doe, 60%; Jane Q. Doe, 40%."

PRIMARY – Full Name	Address	Date of Birth	Soc. Sec. No.	Phone No.	Relationship	% of Benefit
Lauren Abruzzo	[redacted]	[redacted]	[redacted]	[redacted]	Sister	100

CONTINGENT – Full Name	Address	Date of Birth	Soc. Sec. No.	Phone No.	Relationship	% of Benefit

Signature of Member/Employee: Martin P. Abruzzo Date: March 4, 2018

Human Resources Department – Retain for your records.

Standard Life Insurance Company of New York

Enrollment and Change Form

Mark all boxes and complete all sections that apply. Return completed form to your Human Resources Department (HR Dept.).

APPLICANT

Your Name (Last, First, Middle) BETZ Richard T.		Group Name TOWN OF OYSTER BAY	Group Number(s) 433783
Your Address 25 Croydon Dr.		City Massapequa	State N.Y. Zip 11758
Your Soc. Sec. No. [redacted]	Date of Birth [redacted]	☒ Male ☐ Female	Job Title/Occupation

COVERAGE SECTION

For questions about the coverage options available to you, and any Evidence Of Insurability requirements, ask your HR Dept.

1. Life Insurance
☐ Life ☐ Life with AD&D Employer paid amount $_____
☐ Additional/Optional Life ☐ Additional/Optional Life with AD&D Your requested amount $_____

2. Voluntary Life Insurance
☐ Voluntary Life ☒ Voluntary Life with AD&D Your requested amount $ 134,080

3. Dependents Life Insurance
☐ Life ☐ Life with AD&D Employer paid amount $_____
☐ Spouse requested amount $_____ Spouse Name _____ Date of Birth _____
☐ Children requested amount $_____

4. Supplemental Life Insurance
☐ Supplemental Life Your requested amount $_____ Spouse requested amount $_____

5. Short Term Disability ☐ Employer Paid ☐ Enhanced (Buy-up) ☐ Voluntary STD
6. Long Term Disability ☐ Employer Paid ☐ Enhanced (Buy-up) ☐ Voluntary LTD
7. Dental *(See below)* ☐ Employer Paid ☐ High Plan ☐ Voluntary Dental

DENTAL

Marital Status ☐ Single ☒ Married ☐ Divorced
Coverage requested for ☐ You, your Spouse and Children ☐ You and your Spouse ☐ You only ☐ You and your Children (no Spouse)
Are you covered for dental insurance under another plan? ☐ Yes ☐ No Are one or more Dependents? ☐ Yes ☐ No

List Dependents to enroll or delete. (Last name if different, First, Middle Initial)	Sex M	Sex F	Date of Birth	*List Dependents to enroll or delete.* (Attach sheet for additional Dependents if needed)	Sex M	Sex F	Date of Birth
Spouse				Child 2			
Child 1				Child 3			

Dental Insurance Waiver: Contributory Dental Insurance
The Dental Insurance coverage available to me and my Dependents has been explained to me and I do not want to enroll at this time. I understand that if I elect to enroll in the future, the Dental Insurance coverage may be subject to a Late Enrollment Penalty.
☐ I decline Dental Insurance for myself ☐ I decline Dental Insurance for one or more Dependents

BENEFICIARY

This designation applies to coverage available through your Employer, if any, under Coverage Section 1 or 2 above. Unless specified otherwise on a separate sheet, this designation will also apply to coverage available through your Employer, if any, under Coverage Section 4 above. Designations are not valid unless signed, dated, and delivered to the Employer during your lifetime. See page 2 for further information.

Primary – Full Name	Address	Soc. Sec. No.	Relationship	% of Benefit
SHARON A BETZ	[redacted]		wife	100

Contingent – Full Name	Address	Soc. Sec. No.	Relationship	% of Benefit
MEGHAN BETZ	[redacted]		child	50
KATIE BETZ	[redacted]		child	50

CHANGE

Use this section only when you wish to make a change after insurance becomes effective. Complete all boxes and sections that apply.
☐ Add Dependent ☐ Delete Dependent ☐ Name Change ☐ Beneficiary Change
Date of add/delete _____ Former name _____ ☐ Other _____

SIGNATURE

I wish to make the choices indicated on this form. If electing coverage, I authorize deductions from my wages to cover my contribution, if required, toward the cost of insurance. I understand that my deduction amount will change if my coverage or costs change.

Fraud Notice – Only applies to Accident and Health Insurance (AD&D/Disability/Dental): Any person who knowingly and with intent to defraud any insurance company or other person files an application for insurance or statement of claim containing any materially false information, or conceals for the purpose of misleading, information concerning any fact material thereto, commits a fraudulent insurance act, which is a crime, and shall also be subject to a civil penalty not to exceed five thousand dollars and the stated value of the claim for each such violation.

Member/Employee Signature Required Richard T. Be Date (Mo/Day/Yr) 2/26/09

HR Dept. – Complete this section. Retain form for your records.

Dvsn ID	Billing Cat.	Date of Hire/Rehire	Hrs Worked Per Wk	Earnings
281	0100	8/30/73	40	$ 133.053 Per: ☐ Hour ☐ Wk ☐ Mo ☒ Yr

WHEREAS, pursuant to public notice, bids were duly solicited, and were regularly received on September 30, 2019, for Contract No. DP19-200, Littauer Estate Roof Replacement, and said bids were publicly opened and read; and

WHEREAS, Richard W. Lenz, P.E., Commissioner, Department of Public Works/Highway, by memorandum dated October 17, 2019, advised that in compliance with the Town's Procurement Policy, the Bid Proposals received for Contract No. DP19-200, were reviewed by the Consulting Engineer, Nassau Suffolk Engineering & Architecture, PLLC; and

WHEREAS, by letter dated October 14, 2019, Nassau Suffolk Engineering & Architecture, PLLC, recommended the award of Contract No. DP19-200 to DME Construction Associates Inc., 126 Old Field Road, Old Field, New York 11733, the lowest responsive bidder among four (4) bids received, in the amount of $434,198.00; and

Reviewed By Office of Town Attorney

WHEREAS, as per Town policy, $21,709.90 should be added to the low bid amount for potential quantity increases for a total bid encumbrance of $455,907.90; and

WHEREAS Commissioner Lenz, by said memorandum, concurred with the recommendation of Nassau Suffolk Engineering & Architecture, PLLC, and recommended the award of Contract No. DP19-200, to DME Construction Associates Inc., 126 Old Field Road, Old Field, New York 11733, the lowest responsive bidder, in the amount of $434,198.00, and $21,709.90 for potential quantity increases for a total bid encumbrance of $455,907.90; and

WHEREAS, the estimated construction time for completion of the contract is ninety (90) calendar days, and funds are available through Account No. DGS-H-1997-20000-000-1401-001,

NOW, THEREFORE, BE IT RESOLVED, That the recommendations as hereinabove set forth are accepted and approved, and Contract No. DP19-200 is awarded to DME Construction Associates Inc. in an amount not to exceed $455,907.90 in accordance with the provisions herein, and the Supervisor or his designee is hereby authorized and directed to execute documents accordingly; and be it further

RESOLVED, That the Comptroller is hereby authorized and directed to issue a total encumbrance order in a total amount not to exceed $455.907.90, upon presentation of a duly certified claim, after audit, to be drawn from Account No. DGS-H-1997-20000-000-1401-001.

-#-

The foregoing resolution was declared adopted after a poll of the members of the Board; the vote being recorded as follows:

Supervisor Saladino	Aye
Councilman Muscarella	Aye
Councilman Macagnone	Nay
Councilwoman Johnson	Aye
Councilman Imbroto	Aye
Councilman Hand	Aye
Councilman Labriola	Aye

13

TOWN OF OYSTER BAY

INTER-DEPARTMENTAL MEMO

October 17, 2019

TO: MEMORANDUM DOCKET

FROM: RICHARD W. LENZ, P.E., COMMISSIONER
DEPARTMENT OF PUBLIC WORKS/HIGHWAY

SUBJECT: AWARD OF CONSTRUCTION CONTRACT
LITTAUER ESTATE ROOF REPLACEMENT
LOCATED IN SYOSSET, NY
CONTRACT NO.DP 19-200
ACCOUNT NO. DGS-H-1997-20000-000-1401-001
PROJECT ID NO. 1401TWNA-03

On September 30, 2019, the Division of Purchasing received bids for the subject project and the consulting engineer reviewed the bids. DME Construction Associates Inc., 126 Old Field Road Old Field NY 11733, Federal ID 452820345 submitted the lowest responsive bid among four (4) bidders in the amount of $434,198.00.

Attached is a letter dated October 4, 2019 from the office of Nassau Suffolk Engineering & Architecture, PLLC recommending the award of this contract to DME Cosnstruction Associates Inc., in the amount of $434,198.00. In accordance with Town policy $21,709.90 should be applied to the low bid amount for potential quantity increases for a total bid encumbrance of $455,907.90.

The estimated construction time for completion of the subject contract is 90 calendar days. Funds are available for the subject contract work in Account No. DGS-H-1997-20000-000-1401-001.

We concur with the recommendation of Nassau Suffolk Engineering & Architecture, PLLC and request that Contract No. DP 19-200 be awarded to DME Cosnstruction Associates in the total bid amount of $434,198.00 and that $21,709.90 be applied to the low bid amount for a total bid encumbrance of $455,907.90.

RICHARD W. LENZ, P.E.
COMMISSIONER
DEPARTMENT OF PUBLIC WORKS/HIGHWAY

RWL/JCT/MR/DDM/lk
Attachments

cc: Town Attorney (w/9 copies)
Steven Ballas, Comptroller
Eric Turman, Commissioner/General Services
Kathy Stefanich, Public Works

DP19-200 Littauer Roof Replacement Award Docket DME 2

NASSAU SUFFOLK
ENGINEERING &
ARCHITECTURE, PLLC

October 4, 2019

Richard W. Lenz, P.E.
Commissioner of Public Works
Town of Oyster Bay Department of Public Works
150 Miller Place
Syosset, NY 11791

Re: Littauer Estate Roof Replacement
Contract No. DP 19-200 (PW 030-19)
NSEA No. N-40:1901

Dear Commissioner Lenz:

On September 30, 2019, four (4) bid proposals were received by the Town of Oyster Bay ("Town") for the Littauer Estate Roof Replacement project in response to the Town's Notice to Bidders for Bid Number PW 030-19.

DME Construction Associates, Inc. ("DME") submitted the lowest responsive bid in the amount of $434,198.00. The Engineer's estimate of August 6, 2019 prepared by Nassau Suffolk Engineering & Architecture, PLLC ("NSEA") was $460,000.00. DME's bid package was reviewed for verification of compliance with the contract requirements as part of NSEA's screening and qualification process. DME has a history of satisfactory performance with the Town and their prior experience with comparable projects is acceptable.

Based upon the foregoing, NSEA hereby recommends that Contract DP 19-200 (PW030-19) be awarded to DME for the total amount of $434,198.00.

If you have any questions, or would like further explanation, please do not hesitate to contact me.

Very truly yours,

Nassau Suffolk Engineering & Architecture PLLC

Bruce Strum, AIA
Director of Architecture

cc: John Tassone, Deputy Commissioner, Town of Oyster Bay, Department of Public Works
Matt Russo, PE, Town of Oyster Bay, Department of Public Works
Daniel Midgette, Project Manager, Town of Oyster Bay, Department of Public Works
Brian Kunzig, Project Manager, Town of Oyster Bay, Department of Public Works
Michael W. Spinelli, AIA, President, Nassau Suffolk Engineering & Architecture, PLLC

801 Motor Parkway, Suite 103, Hauppauge, New York 11788
T: 631.574.4870 F: 631.574.4871 www.nassausuffolkea.com

BID NUMBER: PW 030-19 (DP 19-200)
TITLE: LITTAUER ESTATE ROOF REPLACEMENT LOCATED IN SYOSSET, NY
OPENING DATE: SEPTEMBER 30, 2019

NAME	BASE	ALT 1	ALT 2	TOTAL
Roof Services Deer Park, NY Bid Bond BB 5% Amt B13				759,942.65
Moore Consulting Corp Yaphank, NY Bid Bond BB 5% Amt B10				566,000.00
DME Construction Setauket Bid Bond BB 5% Amt B10				434,198.00
Statewide Roofing Ronkonkoma Bid Bond BB 5% Amt B10				745,000.00
Bid Bond				
Bid Bond				
Bid Bond				
Bid Bond				
Bid Bond				
Bid Bond				

Reviewed By
Office of Town Attorney

WHEREAS, pursuant to public notice, bids were duly and regularly received for Contract No. DPW 19-185, Lake Avenue C.V.M. Building Extension, in accordance with the specifications contained therein; and

WHEREAS, of the three (3) bids received, the low bidder submitted a bid price beyond the budgeted amount; and

WHEREAS, Richard W. Lenz, P.E., Commissioner, Department of Public Works, by memorandum dated October 17, 2019, requested that all of the bids for Contract No. DPW 19-185 be rejected, and further recommended that the Division of Purchasing proceed with setting a bid date to receive new bids for said Contract,

NOW, THEREFORE, BE IT RESOLVED, That upon the abovementioned recommendations, the three (3) bids received in connection with Contract No. DPW 19-185 are hereby rejected, and the Division of Purchasing is hereby authorized and directed to proceed with setting a bid date for receiving new bids for the aforementioned Contract.

-#-

The foregoing resolution was declared adopted after a poll of the members of the Board; the vote being recorded as follows:

Supervisor Saladino	Aye
Councilman Muscarella	Aye
Councilman Macagnone	Aye
Councilwoman Johnson	Aye
Councilman Imbroto	Aye
Councilman Hand	Aye
Councilman Labriola	Aye

TOWN OF OYSTER BAY

INTER-DEPARTMENTAL MEMO

October 17, 2019

TO: MEMORANDUM DOCKET

FROM: RICHARD W. LENZ, P.E., COMMISSIONER
DEPARTMENT OF PUBLIC WORKS/HIGHWAY

SUBJECT: REJECTION OF BIDS & PERMISSION TO REBID
LAKE AVENUE C.V.M. BUILDING EXTENSION
CONTRACT NO. DPW19-185

On February 27, 2019, the Division of Purchasing had received three (3) bids for the subject project. Of the bids received, the lowest bidder, S.J. Hoerning Construction Inc., submitted a bid price beyond the budgeted amount. The Division of Engineering is recommending the rejection of bids and requesting that the contract be re-bid.

It is hereby requested that the Town Board authorize, by Resolution, the rebid of this contract and that the Division of Purchasing, by copy of this memorandum, shall proceed with setting a bid date for receiving bids for this contract. They are requested to contact Brian Kunzig, Project Manager, at extension 5741 to establish a bid date.

RICHARD W. LENZ, P.E.
COMMISSIONER
DEPARTMENT OF PUBLIC WORKS/HIGHWAY

RWL/JCT/MR/BK/lk

cc: Town Attorney (w/9 copies)
Steven C. Ballas, Comptroller
Eric Tuman, Commissioner/General Services
Michael Cipriano, Division Head, C.V.M.

Reviewed by
Office of Town Attorney
Elizabeth A. Jacobson

WHEREAS, by Resolution No. 1040-2009, adopted on December 1, 2009, the Town Board authorized the Supervisor to enter into an Inter-Municipal Agreement with the Incorporated Village of Farmingdale, which provided for the Town to maintain the Village's street lighting system for the period December 1, 2009 through November 30, 2011; and

WHEREAS, said Inter-Municipal Agreement has been periodically renewed, and the most recent agreement will expire on November 30, 2019; and

WHEREAS, Hon. Ralph Ekstrand, Mayor of the Incorporated Village of Farmingdale, by letter dated October 9, 2019, has requested that the Agreement between the Village and the Town be extended; and

WHEREAS, John P. Bishop, Deputy Commissioner, Highway Department, by memorandum dated October 16, 2019, requested Town Board authorization for the Supervisor or his designee to enter into an Inter-Municipal Agreement with the Incorporated Village of Farmingdale, providing for the Town to maintain the Village's street lighting system for a period from December 1, 2019 through November 30, 2021, under the same terms as the Inter-Municipal Agreement attached hereto and hereby made a part hereof,

NOW, THEREFORE, BE IT RESOLVED, That the request as hereinafter set forth is hereby accepted and approved, and the Supervisor or his designee is hereby authorized and directed to enter into an Inter-Municipal Agreement with the Incorporated Village of Farmingdale, 361 Main Street, Farmingdale, New York 11735, providing for the Town to maintain the street lighting system for the Incorporated Village of Farmingdale from December 1, 2019 through November 30, 2021, under the terms as set forth in the Inter-Municipal Agreement attached hereto and hereby made a part hereof.

-#-

The foregoing resolution was declared adopted after a poll of the members of the Board; the vote being recorded as follows:

Supervisor Saladino	Aye
Councilman Muscarella	Aye
Councilman Macagnone	Aye
Councilwoman Johnson	Aye
Councilman Imbroto	Aye
Councilman Hand	Aye
Councilman Labriola	Aye

TOWN OF OYSTER BAY
INTER-DEPARTMENTAL MEMO

TO: MEMORANDUM DOCKET

FROM: JOHN P. BISHOP, DEPUTY COMMISSIONER
HIGHWAY DEPARTMENT

DATE: OCTOBER 16, 2019

SUBJECT: INTER MUNICIPAL AGREEMENT FOR STREET LIGHTING WITH THE INCORPORATED VILLAGE OF FARMINGDALE

Since December 1, 2009, the Town of Oyster Bay has maintained the street lighting system for the Incorporated Village of Farmingdale pursuant to a written inter-municipal agreement, originally authorized by Town Board Resolution No. 1040-2009, adopted on December 1, 2009.

Since that time, the inter-municipal agreement has been renewed from time to time; the most recent agreement authorized by Town Board Resolution No. 839-2017, adopted on December 12, 2017, expires on November 30, 2019. On October 9, 2019, this department was notified in writing from Mr. Brian Harty, Village Administrator, requesting to extend this agreement between the Village and Town.

The undersigned requests and recommends that the Town Board approve the Town entering into an inter-municipal agreement with the Incorporated Village of Farmingdale for a period commencing, December 1, 2019 through November 30, 2021, with a fee of $100.00 per repair location serviced.

JOHN P. BISHOP, DEPUTY COMMISSIONER
HIGHWAY DEPARTMENT

JPB/km
ATT.
CC: Town Attorney (9)
Comptroller Office
Richard W. Lenz, P.E., Commissioner of DPW/Highway
Tim Keating, Supervisor of Lighting Bureau, Highway Department

Mail Log

DEPUTY COMM/HIGHWAY

Village of Farmingdale

P.O. Box 220 • 361 Main Street • Farmingdale, New York 11735
Tel: 516-249-0093 • Fax: 516-249-0355
www.farmingdalevillage.com

October 9, 2019

To: Timothy Keating
Town of Oyster Bay Lighting Department

From: Brian Harty
Village Administrator
Village of Farmingdale

Re: Town of Oyster Village of Farmingdale Inter-municipal Agreement for Street Lighting Services

The Village of Farmingdale wishes to continue its Inter-municipal Agreement with the Town of Oyster Bay where the Town provides street lighting services to the Village of Farmingdale.

Tim

CORRECTED COPY

Meeting of December 12, 2017 Resolution No. 839-2017

WHEREAS, by Resolution No. 1040-2009, adopted on December 1, 2009, the Town Board authorized the Supervisor to enter into an Inter-Municipal Agreement with the Incorporated Village of Farmingdale, which provided for the Town to maintain the Village's street lighting system for the period December 1, 2009 through November 30, 2011; and

WHEREAS, said Inter-Municipal Agreement has been periodically renewed, the most recent renewal having expired on November 30, 2017; and

WHEREAS, since December 1, 2017, the Town has continued to maintain the street lighting system for the Incorporated Village of Farmingdale under the same terms as contained in the expired Agreement; and

WHEREAS, Hon. Ralph Ekstrand, Mayor of the Incorporated Village of Farmingdale, by letter dated November 29, 2017, has requested that the Agreement between the Village and the Town be extended; and

WHEREAS, John P. Bishop, Deputy Commissioner, Highway Department, by memorandum dated November 29, 2017, requested Town Board authorization for the Supervisor to enter into an Inter-Municipal Agreement with the Incorporated Village of Farmingdale, providing for the Town to maintain the Village's street lighting system for a period from December 1, 2017 through November 30, 2019, under the same terms as the Inter-Municipal Agreement which expired on November 30, 2017,

NOW, THEREFORE, BE IT RESOLVED, That the request as hereinafter set forth is hereby accepted and approved, and the Supervisor is hereby authorized and directed to enter into an Inter-Municipal Agreement with the Incorporated Village of Farmingdale, 361 Main Street, Farmingdale, New York 11735, providing for the Town to maintain the street lighting system for the Incorporated Village of Farmingdale from December 1, 2017 through November 30, 2019, with the Town to charge a fee of $50.00 for each repair location serviced, when the repair consists of a photo cell, bulb, or fuse replacement; all other repairs (wiring, complete fixture replacements, etc.) to be performed by the Town on a time and material basis.

-#-

Reviewed By Office of Town Attorney

The foregoing resolution was declared adopted after a poll of the members of the Board; the vote being recorded as follows:

Supervisor Saladino	Aye
Councilman Muscarella	Aye
Councilman Macagnone	Aye
Councilwoman Alesia	Absent
Councilwoman Johnson	Aye
Councilman Imbroto	Absent
Councilman Hand	Aye

cc: Supervisor
Town Attorney
Comptroller (2)
Highway

AGREEMENT

DATED: , 2019

PARTIES: THE TOWN OF OYSTER BAY, a municipal corporation, having its principal office and place of business at Town Hall, 54 Audrey Avenue, Oyster Bay, Nassau County, New York, hereinafter referred to as the "TOWN"; and

THE INCORPORATED VILLAGE OF FARMINGDALE, a municipal corporation having its principal place of business located at 361 Main Street, Farmingdale, New York, hereinafter called the "VILLAGE",

WITNESSETH:

WHEREAS, the TOWN and the VILLAGE desire to enter into this Agreement to enable the VILLAGE to participate in the TOWN's street lighting system maintenance program, which will provide for the efficient and cost effective maintenance of the VILLAGE's street lighting system,

NOW, THEREFORE, in consideration of the promises, and the mutual covenants and conditions hereinafter set forth, it is understood and agreed as follows:

FIRST: The TOWN's Highway Department (the "DEPARTMENT") shall provide maintenance services to the VILLAGE's street lighting system, in response to a notification by the VILLAGE of a lighting outage or other problem. The Commissioner of the DEPARTMENT or his designee shall, in his best judgment, determine what repairs are necessary to be performed on the street lighting system.

SECOND: The TOWN shall charge a fee of $100.00 for each repair location serviced, when the repair consists of a photo cell, bulb or fuse replacement. All other repairs (wiring, complete fixture replacements, etc.) will be performed by the TOWN on a time and material basis.

THIRD: The term of this Agreement shall be from December 1, 2019 through

November 30, 2021. The VILLAGE shall reimburse the TOWN for all lighting system repair work performed prior to the effective date of this Agreement.

FOURTH: The VILLAGE agrees to procure and maintain from an insurance company authorized to do business in the State of New York, and keep in force during the term of this Agreement, a policy of comprehensive general liability insurance on which the VILLAGE and the TOWN are each named insured, with a policy or policies providing $1,000,000.00 per occurrence/ $2,000,000.00 in the aggregate.

FIFTH: The VILLAGE agrees to indemnify and hold harmless the TOWN, its officers and employees from any and all claims, demands, causes of action, suits, losses, damages, or injury to person or property of whatsoever kind or nature, arising out of the performance of this Agreement. This clause shall not be construed to negate, abridge, or otherwise reduce any other obligation of defense or indemnity which would otherwise exist to defend the TOWN.

SIXTH: No failure of, or delay in, performance by either party, except for payment for serviced rendered, shall constitute default hereunder or give rise to any claims for damages.

SEVENTH: This agreement may be terminated as follows:

a. By either party upon thirty (30) days' written notice to the other party; or

b. By the TOWN if the TOWN no longer operates or maintains a street lighting repair crew and equipment.

The Town shall not be liable for any damages flowing from the termination of this Agreement as provided herein.

EIGHTH: In the event that the TOWN through no fault of its own, is unable to provide all or any of the services requested by the VILLAGE at any time during the term of this contract due to acts of God, strikes, riots, or other similar circumstance, the TOWN shall

promptly notify the VILLAGE of inability and this Agreement may be suspended immediately until such time as the situation is remedied and the TOWN can resume its obligations under this Agreement. The TOWN shall not be liable for damages flowing from any such suspension of this Agreement.

NINTH: All notices required under this Agreement shall be sent by certified mail, return receipt requested to the TOWNS's Office of the Town Attorney or VILLAGE's Office of the Village Clerk, as appropriate.

TENTH: Neither this Agreement nor any provision thereof shall be amended, modified, or deemed modified, except by a subsequent agreement executed by both parties. Any waiver by either party of any provision of this Agreement or of any right or option hereunder shall not be deemed a continuing waiver, and shall not prevent or stop such party from thereafter enforcing such provision, right or option. The failure of either party to insist in any one or more instances upon the strict performance of any of the terms or provisions of this Agreement by the other party shall not be construed as a waiver or relinquishment for the future of any such term or provision, but the same shall continue in full force and effect.

ELEVENTH: The above terms constitute the entire Agreement between the parties. There have been no other oral or written agreements or protocols. If for any reason a court of competent jurisdiction finds any provision of this Agreement to be invalid or unenforceable, such provision of this Agreement will be enforced to the maximum extent permissible under the law, and the other provisions of this Agreement shall remain in full force and effect.

TWELFTH: This Agreement shall be construed and governed in accordance with the laws of the State of New York. The parties agree to submit to the jurisdiction of the courts of the

State of New York, County of Nassau.

IN WITNESS WHEREOF, the INCORPORATED VILLAGE OF FARMINGDALE has executed this Agreement the day and year first above written, and the TOWN OF OYSTER BAY has executed this Agreement the day of , 2019.

TOWN OF OYSTER BAY

By:_____

REVIEWED BY:

Elizabeth A. Faughnan

Deputy Town Attorney

INCORPORATED VILLAGE OF FARMINGDALE

By: _____

Ralph Ekstrand, Mayor

STATE OF NEW YORK)
) ss.:
COUNTY OF NASSAU)

On this day of , 2019, before me personally came _____, to me known, who, being by me duly sworn, did depose and say that he resides at Nassau County, New York; that he is the _____ of the Town of Oyster Bay, the municipal corporation described in and which executed the foregoing instrument; that this agreement was authorized by order of the Town Board of said corporation, and that he signed his name thereto by like order.

_____
Notary Public

STATE OF NEW YORK)
) ss.:
COUNTY OF NASSAU)

On this day of , 2019, before me personally came _____, to me known, who, being by me duly sworn, did depose and say that he resides at Nassau County, New York; that he is the Mayor of the Incorporated Village of Farmingdale, the municipal corporation described in and which executed the foregoing instrument; that he knows the seal of said corporation; that this agreement was authorized by order of the Village Board of said corporation, and that he signed his name thereto by like order.

_____
Notary Public

S:\Attorney\AGREEMTS\Street Lighting\FarmingdaleStreetLighting 12.1.2019 - 11.30.2021.doc

WHEREAS, Joseph G. Pinto, Commissioner, Department of Parks, by memorandum dated October 17, 2019, requested that the Town Board amend Resolutions No. 183-2019, adopted on March 12, 2019, and No. 410-2019, adopted on July 9, 2019, to increase the total to be paid to instructors for the Yoga, Zumba, Cardio Kickboxing, Pilates, Ballroom Dancing and Self-Defense fitness classes, to a total amount not to exceed $42,000.00,

NOW, THEREFORE, BE IT RESOLVED, That the request as hereinabove set forth is accepted and approved, and Resolution No. 183-2019 and Resolution No. 410-2019, are hereby amended to increase the total to be paid to instructors for the Yoga, Zumba, Cardio Kickboxing, Pilates, Ballroom Dancing and Self-Defense fitness classes, to a total amount not to exceed $42,000.00; and be it further

RESOLVED, That the Comptroller is hereby authorized and directed to make payment for same, upon presentation of a duly certified claim, after audit, and that the funds for said payment are to be drawn from Account No. PKS A 7110 47660 000 0000.

-#-

Reviewed By
Office of Town Attorney
Elizabeth A. Faughnan

The foregoing resolution was declared adopted after a poll of the members of the Board; the vote being recorded as follows:

Supervisor Saladino	Aye
Councilman Muscarella	Aye
Councilman Macagnone	Aye
Councilwoman Johnson	Aye
Councilman Imbroto	Aye
Councilman Hand	Aye
Councilman Labriola	Aye

5

TOWN OF OYSTER BAY

Inter-Departmental Memorandum

TO: MEMORANDUM DOCKET

FROM: Joseph G. Pinto, Commissioner, Department of Parks

DATE: October 17, 2019

SUBJECT: Hicksville Athletic Facility Instructors
Amendment to Resolution Nos. 183-2019 and 410-2019

The Department of Parks is requesting Town Board authorization to amend Resolution Nos. 183-2019 and 410-2019 with a new total not to exceed $42,000.00. Funds are being made available by the Director of Finance from account number PKS A 7110 47660 000 0000.

Joseph G.Pinto
Commissioner

Attachements

cc: Office of the Town Attorney (original + 9 copies)

Meeting of July 9, 2019

Resolution No. 410-2019

WHEREAS, Joseph G. Pinto, Commissioner, Department of Parks, by memorandum dated June 12, 2019, requested that the Town Board amend Resolution No. 183-2019, adopted on March 12, 2019, authorizing payment to instructors for fitness classes provided and to be provided at various Town facilities, to add two additional instructors for the following programs:

1) Outdoor Yoga: Tracy Jolly, [redacted]
2) Self Defense: Gene Perceval, [redacted]

Approved By Office of Town Attorney

NOW, THEREFORE, BE IT RESOLVED, That the request as hereinabove set forth is accepted and approved, and Resolution No. 183-2019 is hereby amended to add the aforementioned two instructors to the existing list of fitness instructors; and be it further

RESOLVED, That the Comptroller is hereby authorized and directed to make payment for same, upon presentation of a duly certified claim, after audit, and that payment is to be drawn from Account No. PKSA 7110 47660 000 0000.

-#-

The foregoing resolution was declared adopted after a poll of the members of the Board; the vote being recorded as follows:

Supervisor Saladino	Aye
Councilman Muscarella	Aye
Councilman Macagnone	Aye
Councilwoman Johnson	Aye
Councilman Imbroto	Aye
Councilman Hand	Aye
Councilman Labriola	Aye

Meeting of November 19, 2019 Resolution No. 683-2019

Reviewed By
Office of Town Attorney

WHEREAS, Joseph G. Pinto, Commissioner, Department of Parks, by memorandum dated October 23, 2019, requested Town Board authorization to establish fees for certain Town of Oyster Bay sponsored co-ed adult sports and fitness programs at various Town of Oyster Bay facilities with dates, times, different programs and locations to be established by the Commissioner of Parks; and

WHEREAS, Commissioner Pinto, by said memorandum, requested authorization for the following fees for the following programs:

Volleyball and Badminton:	$75.00 per resident $100.00 per non-resident
Basketball:	$25.00 per resident $40.00 per non-resident
Fitness classes such as:	Yoga indoors/outdoors, Ballroom Dancing, Cardio Kickboxing, Pilates, Self Defense and Zumba $60.00 per resident $70.00 per non-resident; and

WHEREAS, Commissioner Pinto, by said memorandum, further requested authorization to adjust the fees of the programs at his own discretion, if needed.

NOW, THEREFORE, BE IT RESOLVED, That the abovementioned requests are hereby accepted and approved, and the Department of Parks is hereby authorized to establish fees for the hereinabove described co-ed adult sports and fitness programs as requested.

-#-

The foregoing resolution was declared adopted after a poll of the members of the Board; the vote being recorded as follows:

Supervisor Saladino	Aye
Councilman Muscarella	Aye
Councilman Macagnone	Aye
Councilwoman Johnson	Aye
Councilman Imbroto	Aye
Councilman Hand	Aye
Councilman Labriola	Aye

TOWN OF OYSTER BAY

Inter-Departmental Memorandum

TO: Memorandum Docket

FROM: Joseph G. Pinto, Commissioner
Department of Parks

DATE: October 23, 2019

SUBJECT: Hicksville Athletic Center Sports and Fitness Programs

The Department of Parks respectfully requests Town Board approval to establish fees for the following Town of Oyster Bay sponsored 2020 Co-Ed Adult sports and fitness programs.

Co-Ed Adult Sports and Fitness Programs:

The following programs will be offered for resident and non-resident adults ages 18 and over. These programs will run for 10 weeks four times a year. The programs will allow adults to participate in organized sports and organized exercise classes. The programs will be administered by the Department of Parks, Division of Recreation. Dates, times, different programs and locations are to be established by the Commissioner of Parks.

The Department of Parks requests Town Board approval to allow the Commissioner of Parks to adjust the fees of the program at his/her discretion if needed.

The fees for the programs will be as follows:

Volleyball and Badminton: $75.00 per resident
$100.00 per non-resident

Basketball: $25.00 per resident
$40.00 per non-resident

Fitness classes such as: Yoga indoors/outdoors, Ballroom Dancing, Cardio Kickboxing, Pilates, Self Defense and Zumba

$60.00 per resident
$70.00 per non-resident

There is no fee increase from the prior year. The fees will cover the cost of supplies needed to be successfully run this program.

Town Board approval is recommended.

Joseph G. Pinto
Commissioner

CC: Office of Town Attorney (original + 9 copies)

WHEREAS, Elizabeth L. Maccarone, Commissioner, Department of Planning and Development, by memorandum dated October 18, 2019, recommended that the Town Board authorize payment of a refund in the amount of $750.00 to Ms. Vanessa Keehner, for the payment of a time extension fee under Building Permit Number 1586/R19000480, paid in error, as a $750.00 fee was paid under Building Permit Number 19050120, which replaced Permit Number 1586/R19000480,

NOW, THEREFORE, BE IT RESOLVED, That the recommendation as hereinabove set forth is accepted and approved, and the Town Board authorizes payment of a refund to Ms. Vanessa Keehner, in the amount of $750.00, and payment of said refund is to be made upon presentation of a duly certified claim, after audit by the Office of the Comptroller; and be it further

RESOLVED, That funds for said payment are to be drawn from Account No. PAD B 0001 02555 000 0000.

-#-

Reviewed By
Office of Town Attorney

The foregoing resolution was declared adopted after a poll of the members of the Board; the vote being recorded as follows:

Supervisor Saladino	Aye
Councilman Muscarella	Aye
Councilman Macagnone	Aye
Councilwoman Johnson	Aye
Councilman Imbroto	Aye
Councilman Hand	Aye
Councilman Labriola	Aye

13

TOWN OF OYSTER BAY

INTER-DEPARTMENTAL MEMO

October 18, 2019

TO: MEMORANDUM DOCKET

FROM: OFFICE OF THE COMMISSIONER
DEPARTMENT OF PLANNING AND DEVELOPMENT

SUBJECT: RESIDENT REFUND – VANESSA KEEHNER

Pursuant to the Code of the Town of Oyster Bay, this department granted an extension of time at the cost of $750.00 for Building Permit Number 1586 dated April 12, 1956 for an attached garage on the existing dwelling and patio when it was reissued into Building Permit R19000480. An extension of time in the amount of $750.00 was not necessary since Building Permit Number 1586/R19000480 was replaced and superceded by Building Permit Application 19050120. Therefore, the amount of $750.00 should be refunded.

Therefore, in light of the aforementioned facts, a seven hundred fifty dollar ($750.00) refund for the building permit extension of time fee associated with Building Permit Number 1586/R19000480 should be refunded to Ms. Vanessa Keehner, [redacted] under account number PAD B 0001 02555 000 0000.

Elizabeth L. Maccarone

ELIZABETH L. MACCARONE
COMMISSIONER

ELM:km
cc: Town Attorney (w/9 copies)

TOWN OF OYSTER BAY
CLAIM
AUDREY AVENUE, OYSTER BAY, NEW YORK 11771

TAXPAYER IDENTIFICATION NUMBER
FEDERAL ID # ☐ SOCIAL SECURITY # ☐

2

CLAIMANT'S NAME VANESSA KEEHNER	CONTRACT #	ORDER #
CLAIMANT'S ADDRESS [redacted]	CONTRACT NAME	
TOWN DEPARTMENT PLANNING + DEVELOPMENT	CLAIMANT INVOICE #	RESO #

FOLLOW INSTRUCTIONS ON REVERSE SIDE THEN RETURN CLAIM AND INVOICES TO DEPARTMENT RECEIVING MATERIALS OR SERVICES

DETAILED DESCRIPTION OF MATERIALS OR SERVICES

DATE	DESCRIPTION	UNIT PRICE	TOTAL
4/26	REFUND FOR PERMIT R19000480/1586		$750
	WHICH WAS REPLACED AND		
	SUPERCEDED BY BUILDING		
	PERMIT APPLICATION NUMBER		
	19050120.		
	PREPARED BY: KAMILA MATULIK		

THE BELOW CERTIFICATION MUST BE PROPERLY FILLED OUT BY THE CLAIMANT

TOTAL AMOUNT	
CASH DISCOUNT %	
NET AMOUNT	$750

I HEREBY CERTIFY the above articles were sold and delivered and/or the above service rendered to the Town of Oyster Bay on the dates and for the prices or amounts billed; that the above bill is just, true and correct; that no part thereof has been paid except as stated therein and that the balance there stated in the amount of no part thereof has been paid except as stated therein and that the balance there in stated in the amount of SEVEN HUNDRED FIFTY DOLLARS is actually due and owing, and that taxes from which the Town of Oyster Bay is exempt are excluded therefrom.

CLAIMANT FURTHER CERTIFIES that the unit prices charged herein are not higher than those charged to any governmental or commercial consumer for like deliveries.

Date 4-26-19

Signature Vanessa Keehner Title

Print or type name VANESSA KEEHNER Name of Company

I HEARBY APPROVE this claim form for the sum of _____ for the services, disbursements and materials herein indicated which were actually performed and were for the Town of Oyster Bay.

Signature _____ Title _____ Date _____

Department P+D Account _____

April 26, 2019

Janessa Keehner
[redacted]

TO: Whom it may concern
T.O.B. Dept of Planning & Development

RE: [redacted]

Dear Sirs,

I Janessa Keehner as current owner of the home at 48 Bella Vista Ave Glen Cove NY 11542 am requesting $750.- reimbursement which was paid to Town of Oyster Bay on 2-7-19 for renewal of orig. permit #1586 drawn up in 1956.

The reason I am requesting this reimbursement is because I was directed by the C/O Dept. that a renewal was required for compliance. I have now been advised by the applications dept as per direction from Tim Zike the following:

1. that existing permit orig. opened in 1956 should not have been renewed.
2. existing permit will be null & void
3. existing permit needs to be replaced & superceded with a new permit

cont. →

In closing, I welcome any communication concerning this matter - I can be reached at my home phone [redacted].

Sincerely,
Vanessa Kuehner

VANESSA MICHALKA KEEHNER TTTN 1-7281/2214 139

MARYGRACE MICHALKA 19020103

[redacted]

DATE 2-7-19

PAY TO THE ORDER OF Town of Oyster Bay $ 750-

Seven hundred fifty & 00/100 DOLLARS

Security Features Included. Details on Back.

STERLING NATIONAL BANK

MEMO PERMIT - C/O [redacted] Vanessa Keehner

[redacted]

0139

SPECIALTY GRAY

[redacted]

ECK HERE AFTER MOBILE OR REMOTE DEPOSIT

DATE [redacted]

WRITE STAMP OR SIGN BELOW THIS LINE
SERVED FOR FINANCIAL INSTITUTION USE *

[redacted]

CAPITAL ONE, NA

RICHMOND, VA 103 21

The security features listed below as well as those not listed, exceed industry guidelines

Security Features	Results of document alteration
[illegible]	[illegible]
[illegible]	[illegible]
[illegible]	[illegible]

TOWN OF OYSTER BAY

ITEM 1 OF 1

PERMIT RECEIPT

OPERATOR: sgerber
COPY # : 1

Sec:22 Twp:Oyster B Rng: Sub: Blk:22 Lot:4
SBL .....: 22-22-4

DATE ISSUED.....: 02/07/2019
RECEIPT #.....: 01000450752
REFERENCE ID # ...: 19020103

Permit Num .....: R19000480
SITE ADDRESS .....: [redacted]
SUBDIVISION .....:
CITY .....: [redacted]
IMPACT AREA .....:

OWNER .....: MICHALKA LE V KEEHNER ETAL, J&
ADDRESS .....: [redacted]
CITY/STATE/ZIP ...: [redacted]

RECEIVED FROM ....: VANESSA KEEHNER
CONTRACTOR .....: MAINTAIN LIC # MAINTAIN
COMPANY .....: MAINTAIN
ADDRESS .....:
CITY/STATE/ZIP ...: ,
TELEPHONE .....:

FEE ID	UNIT	QUANTITY	AMOUNT	PD-TO-DT	THIS REC	NEW BAL
B-REISSUER FLAT RATE		1.00	750.00	0.00	750.00	0.00
TOTAL PERMIT :			750.00	0.00	750.00	0.00

METHOD OF PAYMENT	AMOUNT	REFERENCE NUMBER
CHECK	750.00	139
TOTAL RECEIPT :	750.00	

Department of Planning and Development
Phone 516-624-6200

Town Hall, Oyster Bay, NY 11771
Fax 516-624-6240

hool District	Section/Block/Lot	Zone	Application No.	ZBA Number	ZBA Date	Receipt No.
orth shore	22-22-4	R1-10	19020103			01000450752

rmittee	MICHALKA LE V KEEHNER ETAL, J&M [redacted]	Contractor	MAINTAIN
operty Owner	MICHALKA LE V KEEHNER ETAL, J&M [redacted]	Plumber	
		Electrician	

ddress of Actual Construction

[redacted]		Tenant	
ermission Granted for the		Estimated Cost of Construction	$0

ISSUE PERMIT 56-1586 - A 14' X 21.5' ATTACHED GARAGE AND 9' X 14' PATIO

s Permit has been issued specifically for the construction or maintenance of the improvement listed hereon. The issuance of this Permit shall not be deemed to be an acknowledgement by the Town of Oyster y as to the legality of any other improvements to the subject premises. It is specifically understood that the issuance of a Certificate of Occupancy by the Town of Oyster Bay for the improvement listed hereon ll be conditioned upon the issuance of a Building Permit and Certificate of Occupancy for any and all other improvements to the subject premises.

ertificate from an approved Electrical Inspection Co. is to be placed on file prior to issuance of a Certificate of Occupancy/Approval/Completion

cated On	Side Of	Feet	Of		Post Office
	BELLA VISTA AVENUE	213.78	W	NASSAU AVENUE	GLEN COVE

ESCRIPTION	FEE	PAID	BALANCE
her	750.00	750.00	0.00
* FEE TOTALS ***	750.00	750.00	0.00

TAL PAID AFTER APPLICATION FEE APPLIED: $750.00

cupancy of this new building or addition or alteration prior to the issuance of a Certificate Occupancy will be considered a violation of the Code of the Town of Oyster Bay. Prompt ification by the various contractors for inspection of their various parts of the work will ld delay in the issuance of the Certificated of Occupancy. Permit and approved plans st be posted on the job site, visual to public inspection, until completion of the work and pections.

Changes regardless of size from the stamped approval plans must be submitted to the Department of Planning and Development and approved before changes are made. Approved plans must be retained on the job and available to inspection at all times.

INSPECTIONS

There are numerous inspection requirements that vary according to the type of structure built or maintained. Some but not all of the required inspections follow:

BUILDING INSPECTIONS:

molition Inspections – Check with Building Division.
oncrete Certifications.
il Conditions – before footings and foundations are poured.
rms for footings, keyways and foundations including rebar.
aterproofing, membrane and insulating
undations and/or slabs.
aming – wood or steel before mechanicals.
aming after mechanicals and before insulating.
sulation inspection – before closing.
ough enclosed.
nal inspection(s).

PLUMBING INSPECTIONS

*Underground plumbing – before backfilling.
*Rough plumbing – before closed up and ready for test.
*Final inspection when all fixtures are set.
*Sewer connection – spur tie-in.
*Sanitary systems. (Excavation/Construction).
*Installation or replacement of burners. (oil, gas, electric).
*All Tanks – Inground or above. (Check with Building Division for required testing and in Testing and Inspections).
*Pressure tests are required for any natural or propane gas installation, Alteration or replacement
*Hydrostatic pressure testing must be witnessed by a plumbing inspector For all fire sprinkler systems.

DRAINAGE, SITE WORK, & RETAINING WALLS:

Contact Planning and Development site engineer.

ALL PERMITS ISSUED IN CONJUNCTION WITH SITE PLAN REVIEW

Please be advised that a Certificate of Occupancy will not be issued for this project until all of the required landscaping has been installed and inspected, or a performance bond in the amount of $_____ has been posted with the Town of Oyster Bay

te Issued:	02/07/2019	Work Must Start By:

must be issued by 05/08/2019 or permit will expire unless renewed prior to expiration.

mittee's copy of approved plans must be available at the site for all inspections

Elizabeth L. Maccarone

mmissioner, Department of Planning and Development

TOWN OF OYSTER BAY

Oyster Bay, Nassau County, New York

ILDING PERMIT UNDER ZONING ORDINANCE AND BUILDING CODE

This permit is issued subject to the provisions of Section 57 of the rkmen s Compensation Law.

tion	Block	Lot	Zone
2	22	4	D

956 Nº 1586 Date 4-12-56

Permission is hereby granted to:

ohn Michalka , Owner

[redacted]

UNLESS EXTENDED OR THE WORK IS STARTED THIS BUILDING PERMIT EXPIRES IN 90 DAYS

wner Contractor

Erect

ttached garage on existing dwelling
4'x21½ Patio 9'x14'

ated at

[redacted]

uant to application, and plans approved by the Building Inspector.

Cost of Construction or Alteration $ 800.00

Permit Fee $ 5.00

TOWN OF OYSTER BAY

Charles F. Hickey

Building Inspector

change in plans during construction of this building should be immediately orted to the Building Inspector and his approval secured. Otherwise Certificate Occupancy may not be issued.

TE: The holder of this permit agrees to comply with all provisions of the Building Zoning Ordinances and with the provisions of all laws and rules relating to the truction of said buildings, additions or alterations, whether herein described or Any violation of the provisions of said Ordinances or this permit shall render offender liable for the penalties provided therefor, and in addition thereto may lt in th immediate revocation of the permit.

TOWN OF OYSTER BAY
DEPARTMENT OF PLANNING & DEVELOPMENT
DIVISON OF BUILDING
Town Hall
Oyster Bay, New York 11771

19050120

To supercede 19020103

APPLICATION FOR PERMIT TO BUILD OR INSTALL

APPLICATION MUST BE TYPEWRITTEN OR PRINTED IN INK LEGIBLY.

	Name	Street Address	Post Office	Zip	Phone #
ERTY ER:	VANESSA KEEHNER	[redacted]			[redacted]
EE NT:					
ICANT:	PROP. OWNER				
HITECT:	JAMES O'GRADY 1266 Glen St. Glen Cove NY 516-801-63				
RACTOR:					
E	BUNCE PLUMBING 117 Glenlawon Ave, Seacliff, NY 11579 516-676-8442				
TRICIAN:					

RESS OF CONSTRUCTION: _____
FFERENT FROM ABOVE — NO. & STREET — POST OFFICE — ZIP CODE

TION OF PROPERTY: N.E.S.W. SIDE OF [redacted] 213.78 FEET
N.E.S.W. OF [redacted] (STREET) (POST OFFICE)
OR
N.E.S.W. OF _____ corner of _____ (STREET) and _____ (STREET) (POST OFFICE)

TYPE OF BUILDING

TYPE OF IMPROVEMENT		B. PROPOSED USE	
1. NEW BUILDING/STRUCTURE		1. ONE FAMILY	X
2. ADDITION/EXTENSION		2. TWO FAMILY	
3. ALTERATION (i.e. Garage Conv.)		3. PARENT CHILD	
4. DECK		4. GARAGE	
5. AWNING/ROOF-OVER		5. BUSINESS	
6. CELLAR ENTRANCE		6. INDUSTRIAL	
7. REISSUE #		7. RESTAURANT	
8. OTHER - maintain existing	X	8. PUBLIC ASSEMBLY	
		9. OTHER	

SCRIBE THE WORK IN DETAIL (Size and Dimension(s) of Structure(s) Maintain Existing 1 Story Garage (320SF), R/O Rear nclosed Porch (232SF), Front Vestibule (46SF), 1-Story Dining Rm Extension (32SF) + Dormer at ND Floor (334SF).

A Disclosure Affidavit needs to be filed with the Application to demonstrate that there is no potential conflict of interest between a property owner, applicant, contractor or other involved party to an Application and any employees or other relationships to the Town of Oyster Bay.

HAVE BOTH AFFIDAVITS NOTARIZED

THE OWNER OF THE BUILDING & THE UNDERSIGNED AGREE TO CONFORM TO ALL APPLICABLE LAWS OF THE TOWN OF OYSTER BAY, COUNTY OF NASSAU & STATE OF NEW YORK

APPLICANT

OF NEW YORK
Y OF NASSAU ss:

essa Keehner being duly sworn, deposes and says: That sides at 63 Willits Rd
mlet of Glen Cove in the State of New York
he/she is authorized by the Owner Vanessa Keehner
e owner in fee of all that certain lot, piece or parcel of land shown on ed survey, situated, lying and being within the unincorporated area of of Oyster Bay, to make application for a permit to perform said work egoing application and accompanying plans, and all the statements d herein are true to deponents own knowledge.
63 Willits RD, Glen Cove NY 11542
516-759-4476
(Sign here) Vanessa Keehner
Sworn to before me this 6th day of May 2019
Allison Vieyra
NOTARY PUBLIC

ALLISON VIEYRA
NOTARY PUBLIC - STATE OF NEW YORK
NO.01VI6018886
QUALIFIED IN NASSAU COUNTY
MY COMMISSION EXPIRES JAN. 19, 2023

OWNER

STATE OF NEW YORK
COUNTY OF NASSAU ss:

Vanessa Keehner being duly sworn, deposes and says: That he/she resides at 63 Willits Rd in the hamlet of Glen Cove in the State of New York and that he/she is the owner in fee of all that certain lot, piece or parcel of land, shown on the attached survey, situated, lying and being within the unincorporated area of the Town of Oyster Bay, that the work proposed to be done upon the said premises, will be done in accordance with the approved application and accompanying plans, and hereby authorizes Vanessa Keehner (applicant) to make application for a permit to perform said work in the foregoing application and accompanying plans, and all the statements herein contained are true to deponent's own knowledge.
(Sign here) Vanessa Keehner (owner)
Sworn to before me this 6th day of May 2019
Allison Vieyra
NOTARY PUBLIC

ALLISON VIEYRA
NOTARY PUBLIC - STATE OF NEW YORK
NO.01VI6018886
QUALIFIED IN NASSAU COUNTY
MY COMMISSION EXPIRES JAN. 19, 2023

(Rev. 07/11/2017)

Reviewed By
Office of Town Attorney

WHEREAS, by Resolution No. 754-2017, adopted November 14, 2017, the Town Board awarded Contract No. HVR17-156, Requirements Contract for Cleaning and Inspecting of Storm Drains, to Thomas Novelli Contracting Corp., 41 Sarah Drive, Farmingdale, New York 11735, for the initial contract period of two years from the date of the award, with an option for three (3) one (1) year extensions on the same terms of the original contract, with funds available as per Town Board Resolution No. 809-2018; and

WHEREAS, Richard W. Lenz, P.E., Commissioner, Department of Public Works, by memorandum dated October 28, 2019, requested Town Board authorization to exercise the option to extend the Agreement for a one year term, nunc pro tunc, from November 14, 2019 through November 13, 2020, at a cost not to exceed $100,000,

NOW, THEREFORE, BE IT RESOLVED, that the recommendation as hereinabove set forth is hereby accepted and approved, and the Department of Public Works is authorized to extend Contract No. HVR17-156, Requirements Contract for Cleaning and Inspecting of Storm Drains Throughout the Town of Oyster Bay, with Thomas Novelli Contracting Corp., for a one year term, nunc pro tunc, from November 14, 2019 through November 13, 2020; and it is further

RESOLVED, that the Comptroller is hereby authorized to make payment for same, in accordance with the applicable terms and provisions of said agreement, upon presentation of a duly certified claim, after audit.

-#-

The foregoing resolution was declared adopted after a poll of the members of the Board; the vote being recorded as follows:

Supervisor Saladino	Aye
Councilman Muscarella	Aye
Councilman Macagnone	Aye
Councilwoman Johnson	Aye
Councilman Imbroto	Aye
Councilman Hand	Aye
Councilman Labriola	Aye

15

TOWN OF OYSTER BAY
INTER-DEPARTMENTAL MEMO

October 28, 2019

TO: MEMORANDUM DOCKET

FROM: RICHARD W. LENZ, P.E., COMMISSIONER
DEPARTMENT OF PUBLIC WORKS/HIGHWAY

SUBJECT: REQUEST APPROVAL FOR EXTENSION
CONTRACT HVR17-156-CLEANING AND INSPECTION OF STORM DRAINAGE SYSTEMS
THOMAS NOVELLI CONTRACTING CORP.

The Highway Department has reviewed the work performed by Thomas Novelli Contracting Corp. with respect to the Cleaning Requirements Contract under contract number HVR17-156 which was awarded by Town Board Resolution Number 754-2017 on November 14, 2017.

The work performed by Thomas Novelli Contracting Corp. was satisfactory and completed in a timely manner. Therefore, it is hereby requested by the Highway Department that contract HVR17-156 be extended from November 14, 2019 through November 13, 2020 at a cost not to exceed $100,000.00.

Also funds are available for this purpose as per Town Board Resolution No. 809-2018 for the Highway Department to use these funds for the Highway Department Requirement Contract as needed throughout the year within the Town of Oyster Bay.

RICHARD W. LENZ, P.E.
COMMISSIONER
DEPARTMENT OF PUBLIC WORKS/HIGHWAY

RWL/lb
Cc: Office of Town Attorney (w/9 copies)
Steve C. Ballas, Comptroller
John P. Bishop, Deputy Commissioner/HWY
John Tassone, Deputy Commissioner, DPW, Division of Engineering
Grace Santamaria, Highway Administration

Reviewed By
Office of Town Attorney

WHEREAS, pursuant to the Code of the Town of Oyster Bay ("Code"), Chapter 241, "Waterways", Section 241-9, "Applications", Elizabeth L. Maccarone, Commissioner, Department of Planning and Development, by memorandum dated October 22, 2019, directed MICHAEL STARITO, Applicant, to provide an Affidavit of Mailing Notice, pursuant to Section 241-9(E)(3) of the Code, of the application to erect, maintain, alter or improve a dock, pier, float, bulkhead or similar structure at 331 Sunset Blvd., Massapequa, New York 11758, known and designated as Section 65, Block 147, Lot 30, on the Nassau County Land and Tax Map; and

WHEREAS, more than 14 days have elapsed since said Affidavit of Mailing Notice was provided; and

WHEREAS, Commissioner Maccarone, by said memorandum, stated that Chapter 241 of the Code requires Town Board approval for structures projecting into the Town waterways, which the proposed structure does, and has requested a calendar date of November 19, 2019, for Town Board action, in connection with the aforementioned application; and

WHEREAS, George Baptista, Jr., Deputy Commissioner, Department of Environmental Resources, by memorandum dated September 18, 2019, advised that pursuant to the provisions of the Town of Oyster Bay Environmental Quality Review Law, the Town Environmental Quality Review Division ("Division") has reviewed the captioned site plan application and has reviewed the relevant environmental factors affected by the uses proposed in the subject application, and has determined that said application warrants a TYPE II ACTION, thus having no significant impact on the environment, in accordance with the Environmental Conservation Law of the State of New York, and the applicable regulations thereof,

NOW, THEREFORE, BE IT RESOLVED, That the Town Board does hereby determine that the aforementioned dock application will not have a significant impact on the environment, that the proposed action in said application constitutes a TYPE II ACTION, in accordance with the New York State Environmental Conservation Law and the applicable regulations thereof, and that the Town Board hereby adopts the Town of Oyster Bay Environmental Quality Review Division Report, dated September 18, 2019; and be it further

RESOLVED, That the application of MICHAEL STARITO, to erect, maintain, alter or improve a dock, float, pier, bulkhead or similar structure, at 331 Sunset Blvd., Massapequa, New York 11758, known and designated as Section 65, Block 147, Lot 30 on the Nassau County Land and Tax Map, is hereby APPROVED.

-#-

The foregoing resolution was declared adopted after a poll of the members of the Board; the vote being recorded as follows:

Supervisor Saladino	Aye
Councilman Muscarella	Aye
Councilman Macagnone	Aye
Councilwoman Johnson	Aye
Councilman Imbroto	Aye
Councilman Hand	Aye
Councilman Labriola	Aye

20

TOWN OF OYSTER BAY
INTER-DEPARTMENTAL MEMO

TO: **MEMORANDUM DOCKET**

FROM: **ELIZABETH L. MACCARONE, COMMISSIONER**
DEPARTMENT OF PLANNING AND DEVELOPMENT

DATE: **OCTOBER 22, 2019**

SUBJECT: **WATERWAYS REVIEW**
MICHAEL STARITO
331 SUNSET BLVD
MASSAPEQUA, NY 11758
SECTION 65, BLOCK 147, LOT(S) 30
DOCK BUILDING PERMIT APPLICATION # 19070106

We have received a request from Michael Starito to "maintain a one 4-foot wide by 6-foot long cantilever deck, one 2.5-foot wide by 15-foot long ramp and one 6-foot wide by 20-foot long mooring float; replace 97 linear feet of existing bulkhead, in place, 18-inches higher than existing; and dredge a 10-foot wide by 96-foot long area to a depth of 4-feet below Mean Low Water with placement of up to 25 cubic yards of material behind the bulkhead." All work is to be done according to the attached plans stamped "NYSDEC Approved" Permit No. 1-2824-02965/00001 dated January 7, 2013 and the Department of the Army, New York District, Corps of Engineers Nationwide Permit No. NAN-2013-00126-EMN dated April 1, 2013. Chapter 241 of the Code of the Town of Oyster Bay entitled "Waterways" requires Town Board approval for structures projecting into the waterways.

Copies of the following documents are attached: Town of Oyster Bay Mooring, Dock, Pier, Float and Bulkhead Permit Application No.19070106; New York State Department of Environmental Conservation (NYSDEC) Permit No. 1-2824-02965/00001 dated January 7, 2013; Department of the Army, New York District Corps of Engineers Permit No. NAN-2013-00126-EMN dated April 1, 2013, and a letter of General Concurrence with the Federal Consistency Assessment Form from the New York State Department of State dated October 26, 2012. Also attached is a memo from George Baptista Jr., Deputy Commissioner Department of Environmental Resources dated September 18, 2019, classifying the project as a TYPE II ACTION under SEQRA. Please note that plans for the existing work can be found attached to the DEC permit.

The relevant documents are attached for your review. Please note the plans can be located in the NYSDEC and the Department of the Army Corps of Engineers Permit approvals.

The existing work at the subject premises, in our opinion, is compatible with the surrounding area.

Pursuant to Section §241-9(E)(3) in the Town Code, all persons, local governments, other agencies or corporations having any property or operating any facilities on the two properties on both sides of the premises for which the permit is sought (four properties in total), and any properties which have any frontage on a waterway and are directly opposite from the subject premises shall be notified at least 14 days in advance, in writing, of the appearance of such matter for Town Board action. It is the responsibility of the applicant to issue said notices and the applicant shall bear the cost of same. Therefore, I respectfully request that this application be put on the agenda for the November 19th, 2019 Town Board calendar to provide the applicant ample time to comply with this requirement.

Elizabeth L. Maccarone
ELIZABETH L. MACCARONE
COMMISSIONER

ELM/MM
Encls.

cc: Legislative Affairs (7 copies w/ attachments)

cc: Town Attorney's Office, Attn: Dennis Sheehan

STATE OF NEW YORK
DEPARTMENT OF STATE
ONE COMMERCE PLAZA
99 WASHINGTON AVENUE
ALBANY, NY 12231-0001

ANDREW M. CUOMO
GOVERNOR

CESAR A. PERALES
SECRETARY OF STATE

October 26, 2012

Ms. Janet Moses
Bulkhead Permits by Gary, Inc.
2 Whaleneck Drive
Merrick, New York 11566

RE: F-2012-0898
U.S. Army Corps of Engineers/New York District Permit Application - Annette Perea
Replace 96.18' of navy bulkhead (ip) with an 18" increase in elevation for flood control. Remove existing mooring float and cantilevers and replaced with two 6' x 20' mooring floats and one 4' x 6' cantilever and two 30" x 15' ramps. Clamshell dredge 25cyds 10' seaward to a depth of 4'. Place dredged material on property. Install a 6' inland vinyl sheathed return and 4' x 96' CCA timber boardwalk
North Canal, Town of Oyster Bay, Nassau County
No Review Necessary

Dear Ms. Moses:

The Department of State received your Federal Consistency Assessment Form and supporting information on 10/17/2012. From the information provided, it appears that the proposed action may be authorized by the Army Corps of Engineers under a Nationwide Permit that the Department of State has already concurred with, and as such further review by the Department of State is not required.

Should the Army Corps determine that the proposed project may not be conducted under the Nationwide Permit program or if the project is modified, please contact the Department of State to determine if further review is required.

This is without prejudice to and does not obviate the need to obtain all other applicable licenses, permits, other forms of authorization or approval that may be required pursuant to existing State statutes.

Sincerely,

Jeffrey Zappieri
Supervisor, Consistency Review Unit
Division of Coastal Resources

JZ/dc
cc: COE/New York District – Acting Section Chief
DEC/Region 1 – Roger Evans

Planning

TOWN OF OYSTER BAY
INTER-DEPARTMENTAL MEMO

September 18, 2019

TO: JOSEPH NOCELLA, OFFICE OF THE TOWN ATTORNEY
ATTENTION: SHEILA TARNOWSKI, OFFICE OF LEGISLATIVE AFFAIRS

FROM: GEORGE BAPTISTA JR., DEPUTY COMMISSIONER,
DEPARTMENT OF ENVIRONMENTAL RESOURCES

SUBJECT: **DOCKS, PIERS & FLOATS PERMIT:**
Michael Starito
Application # 19070106
331 Sunset Blvd, Massapequa, New York
Section: 65 Block: 147 Lot(s): 30

Pursuant to the provisions of the New York State Environmental Quality Review Act (Article 8 of the Environmental Conservation Law, SEQRA, as promulgated in the regulations contained in 6 NYCRR Part 617) and the Town of Oyster Bay Environmental Quality Review (TEQR) Law (Chapter 110 of the Oyster Bay Town Code), the Department of Environmental Resources has reviewed the above-captioned application.

Based on our review, the Department has classified the subject proposal as a **TYPE II ACTION**, under the SEQRA Type II Actions List, at §617.5(c)(12), relative to "construction, expansion or placement of minor accessory/appurtenant residential structures, including garages, carports, patios, decks, swimming pools, tennis courts, satellite dishes, fences, barns, storage sheds or other buildings not changing land use or density;" and under Appendix B, §B(2), of the TEQR Law, relative to "The installation of minor accessory facilities such as lawn sprinkler systems, swimming pool heaters and fire sprinkler systems, provided that such systems comply with all applicable codes and ordinances."

Actions or classes of actions identified in the above-referenced section of SEQRA have been pre-determined not to have a significant impact on the environmental or are otherwise precluded from environmental review under the Environmental Conservation Law, Article 8.

Inasmuch as the action which would be undertaken by the subject applicant is on SEQRA's pre-determined Type II Actions list, as described above, the Department of Environmental Resources has applied the law and finds that the subject application does not require the completion of an environmental assessment form or an environmental impact statement, or any further review under SEQRA.

GEORGE BAPTISTA JR., DEPUTY COMMISSIONER
DEPARTMENT OF ENVIRONMENTAL RESOURCES

cc: Elizabeth L. Maccarone, Commissioner, Department of Planning & Development
Attn: Michael Moriarty, Commercial Planning

1819 SECTION 65 BLOCK 147 LOT(S) 30

19070106

TOWN OF OYSTER BAY
DEPARTMENT OF PLANNING & DEVELOPMENT
DIVISON OF BUILDING
Town Hall
Oyster Bay, New York 11771

APPLICATION FOR PERMIT TO BUILD OR INSTALL

APPLICATION MUST BE TYPEWRITTEN OR PRINTED IN INK LEGIBLY.

	Name	Street Address	Post Office	Zip	Phone #
PROPERTY OWNER:	Michael STARITO	331 Sunset Blvd	MASSAP	11758	[redacted]
LESSEE TENANT:					
APPLICANT:	Bulkhead Permits by Gary	2 whaleneck Dr	Merrick NY	11566	516 546 3479
ARCHITECT:	John Weiburg	4046 Hudson Ave SEAFORD NY	11783	516 603 5770	
CONTRACTOR:	~~Kevel Moore~~	~~Pobiolon~~	~~Massapequa Park NY~~	~~11762~~	~~516 541 8819~~
PLUMBER:					
ELECTRICIAN:					

Janet Moses

ADDRESS OF CONSTRUCTION: _____
IF DIFFERENT FROM ABOVE — NO. & STREET — POST OFFICE — ZIP CODE

LOCATION OF PROPERTY: N.E.S.W. SIDE OF _____ FEET
N.E.S.W. OF _____ (STREET) _____ (POST OFFICE)
OR
N.E.S.W. OF _____ corner of _____ (STREET) and _____ (STREET) _____ (POST OFFICE)

TYPE OF BUILDING

A. TYPE OF IMPROVEMENT	EXISTING	PROPOSED	B. PROPOSED USE	EXISTING	PROPOSED
1. NEW BUILDING/STRUCTURE			1. ONE FAMILY		
2. ADDITION/EXTENSION			2. TWO FAMILY		
3. ALTERATION (i.e. Garage Conv.)			3. PARENT CHILD		
4. DECK			4. GARAGE		
5. AWNING/ROOF-OVER			5. BUSINESS		
6. CELLAR ENTRANCE			6. INDUSTRIAL		
7. REISSUE #			7. RESTAURANT		
8. OTHER	Bulkhead		8. PUBLIC ASSEMBLY		
			9. OTHER		

DESCRIBE THE WORK IN DETAIL (Size and Dimension(s) of Structure(s) Replace 96.18' of bulkhead 18" increase
Deviation: remove existing float & cantilevers - Replace with (2) 6'x20' floats & (2) 4'x6' cantilever
30"x 15' RAMPS' DREDGING. 6' inland return & 4'x. 96' inland boardwalk

CHECK HERE IF TREES ARE BEING REMOVED ON THE PROPERTY. IF SO, A *TREE PERMIT* MUST BE OBTAINED FROM THE DEPARTMENT OF PARKS. PLEASE CALL (516) 797-7956 FOR FURTHER INFORMATION.

HAVE BOTH AFFIDAVITS NOTARIZED

THE OWNER OF THE BUILDING & THE UNDERSIGNED AGREE TO CONFORM TO ALL APPLICABLE LAWS OF THE TOWN OF OYSTER BAY, COUNTY OF NASSAU & STATE OF NEW YORK

APPLICANT

STATE OF NEW YORK
COUNTY OF NASSAU ss:

Janet Moses being duly sworn, deposes and says: That he/she resides at 2 Whaleneck Dr. In the hamlet of Merrick in the State of New York and that he/she is authorized by the Owner Michael Starito who is the owner in fee of all that certain lot, piece or parcel of land shown on the attached survey, situated, lying and being within the unincorporated area of the Town of Oyster Bay, to make application for a permit to perform said work in the foregoing application and accompanying plans, and all the statements contained herein are true to deponents own knowledge.
Address: 2 Whaleneck Dr Merrick NY 11566
Phone: 516 546 3479

(Sign here) Janet Moses

Sworn to before me this 10th day of June 2019

NOTARY PUBLIC GARY W. MOSES
Notary Public, State of New York
Reg. No. 01M06186523
Qualified in Nassau County
Commission Expires 05/052020

OWNER

STATE OF NEW YORK
COUNTY OF NASSAU ss:

Michael Starito being duly sworn, deposes and says: That he/she resides at 331 Sunset Blvd in the hamlet of Massapequa in the State of New York and that he/she is the owner in fee of all that certain lot, piece or parcel of land shown on the attached survey, situated, lying and being within the unincorporated area of the Town of Oyster Bay, that the work proposed to be done upon the said premises, will be done in accordance with the approved application and accompanying plans, and hereby authorizes _____ (applicant) to make application for a permit to perform said work in the foregoing application and accompanying plans, and all the statements herein contained are true to deponent's own knowledge.

(Sign here) Michael Starito (owner)

Sworn to before me this 10th day of June 2019

NOTARY PUBLIC
GARY W. MOSES
Notary Public, State of New York
Reg. No. 01M06186523
Qualified in Nassau County
Commission Expires 05/052020

(Rev. 05/26/2016)

Applicant: Michael Starito
Project Site: 331 Sunset Blvd
Massapequa, NY 11758
Proposed: Maintain existing
(2) mooring floats
completed bulkhead installation
Prepared by Bulkhead
Permits by Gary Inc.
2 Whaleneck Dr
Merrick, NY 11566
Scale 1"=30'
June 3, 2019

Existing Project Plan

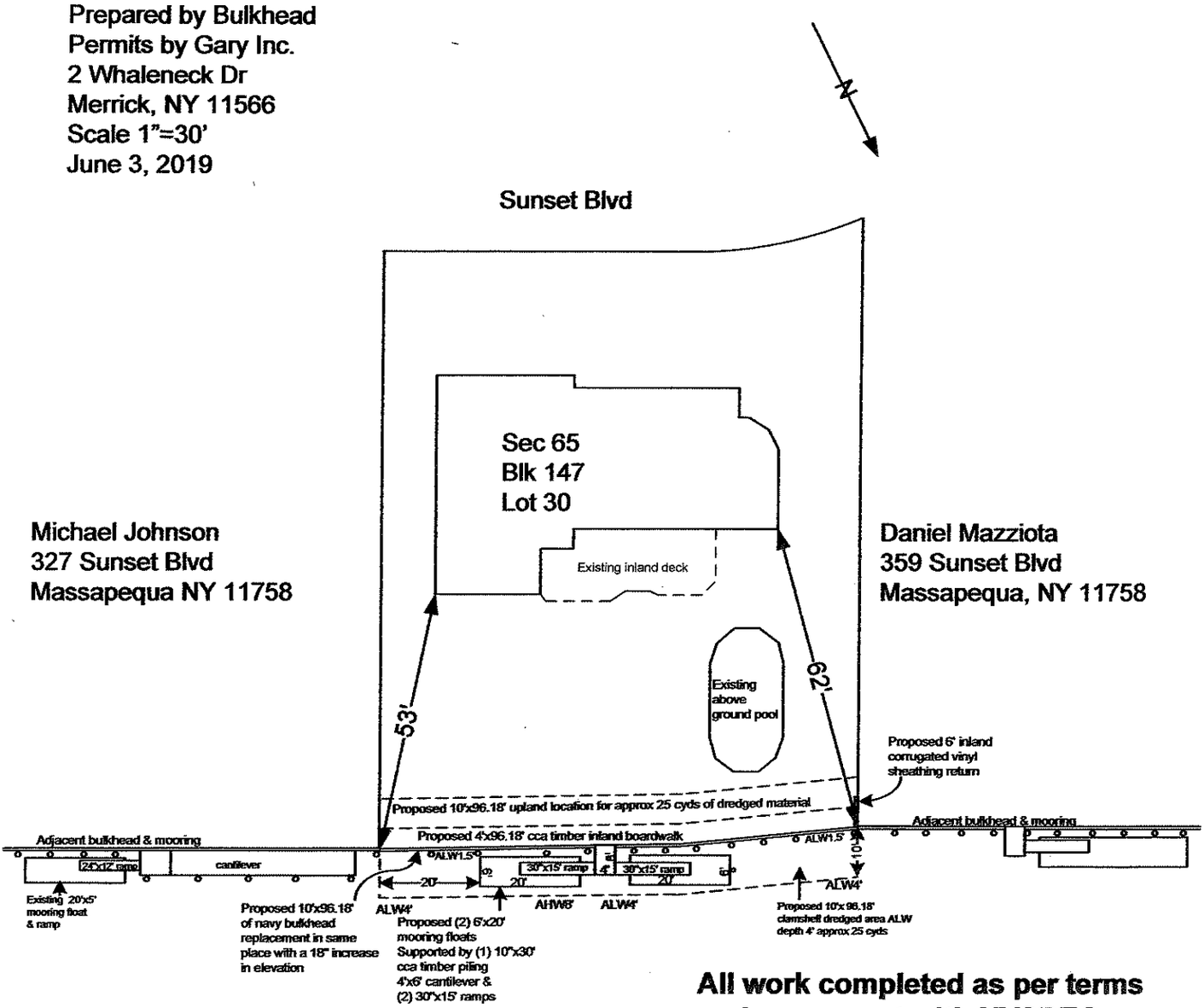

All work completed as per terms and agreement with NYSDEC and Army Corps of Engineers

North Canal
Width 100'
Flood
Ebb

STATE OF NEW YORK
JOHN J WEIBURG
071117
LICENSED PROFESSIONAL ENGINEER

19070108

CROSS VIEW

All hardware, nails and bolts shall be hot dip galvanized, all bolt heads and nuts will be used with cut washers. All timber will be pressure treated treated marine grade. All sheathing Shore guard corrugated vinyl marine grade

1 9 0 7 0 1 0 8

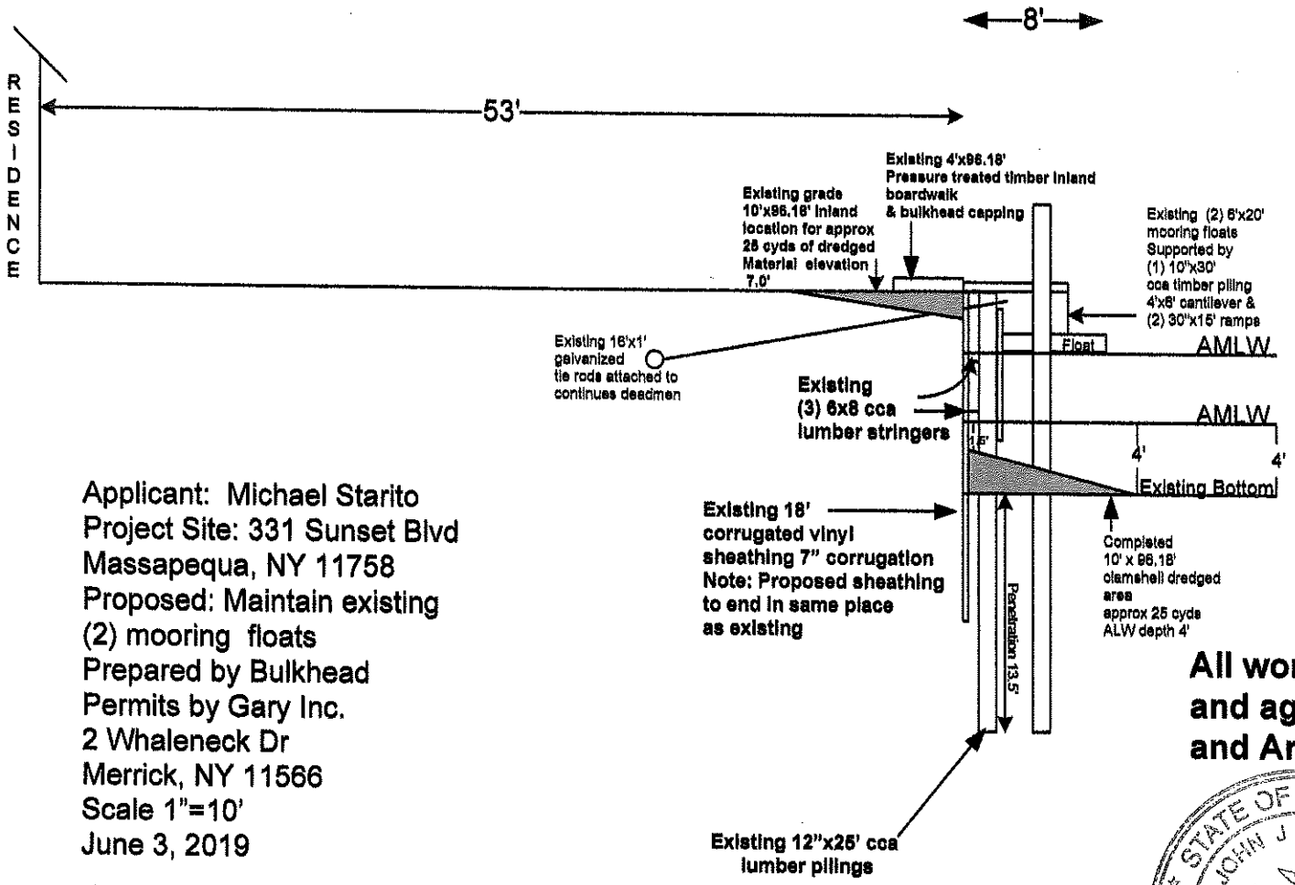

Applicant: Michael Starito
Project Site: 331 Sunset Blvd
Massapequa, NY 11758
Proposed: Maintain existing
(2) mooring floats
Prepared by Bulkhead
Permits by Gary Inc.
2 Whaleneck Dr
Merrick, NY 11566
Scale 1"=10'
June 3, 2019

All work completed as per terms and agreement with NYSDEC and Army Corps of Engineers

STATE OF NEW YORK
JOHN J WEIBURG
071117
LICENSED PROFESSIONAL ENGINEER

Applicant: Michael Starito
Project Site: 331 Sunset Blvd
Massapequa, NY 11758
Proposed: Maintain existing
(2) mooring floats
completed bulkhead installation
Prepared by Bulkhead
Permits by Gary Inc.
2 Whaleneck Dr
Merrick, NY 11566
Scale 1"=30'
June 3, 2019

Existing Project Plan

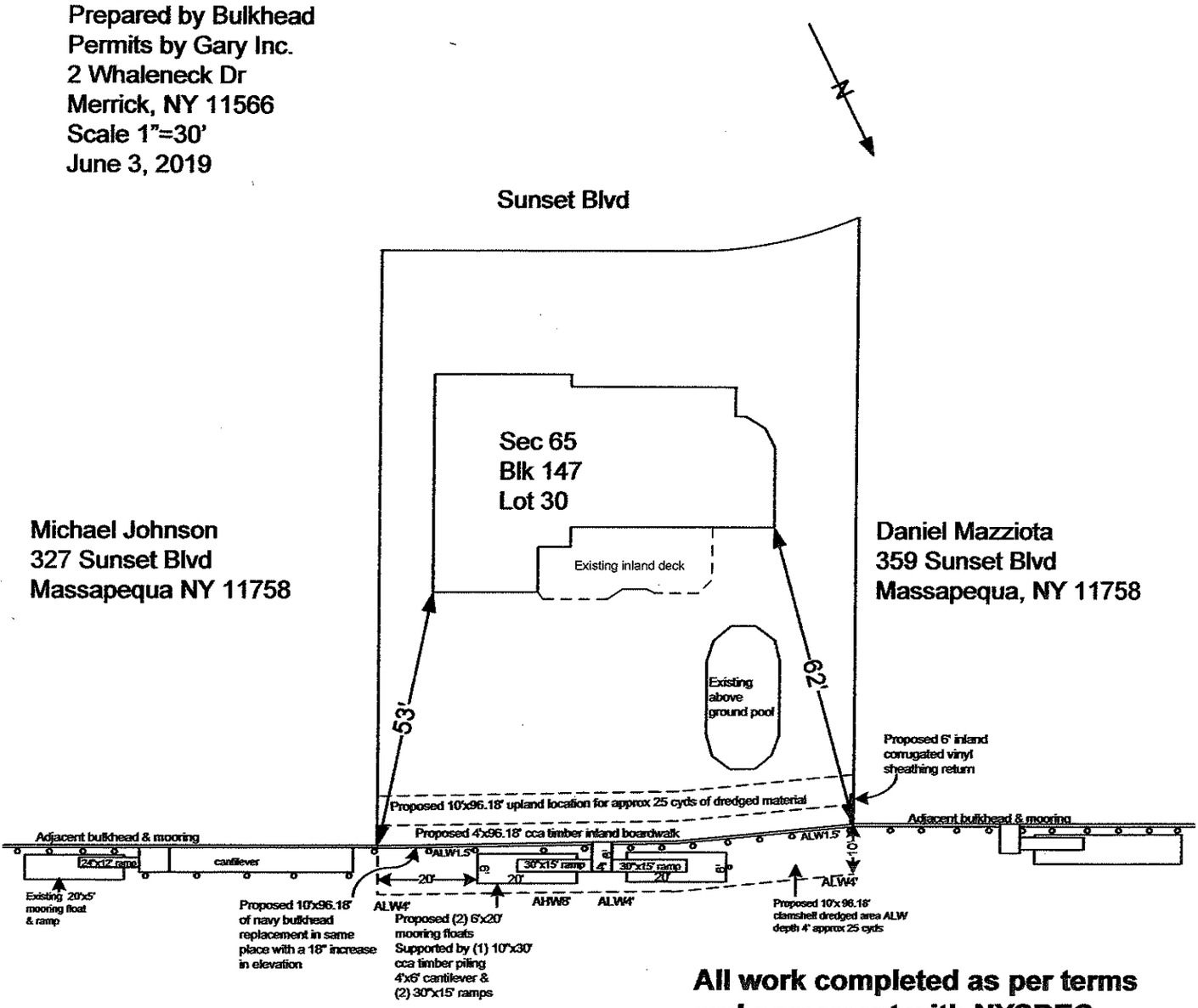

All work completed as per terms and agreement with NYSDEC and Army Corps of Engineers

North Canal
Width 100'
Flood
Ebb

STATE OF NEW YORK
JOHN J WEIBURG
071117
LICENSED PROFESSIONAL ENGINEER

19070108

CROSS VIEW

All hardware, nails and bolts shall be hot dip galvanized, all bolt heads and nuts will be used with cut washers. All timber will be pressure treated treated marine grade. All sheathing Shore guard corrugated vinyl marine grade

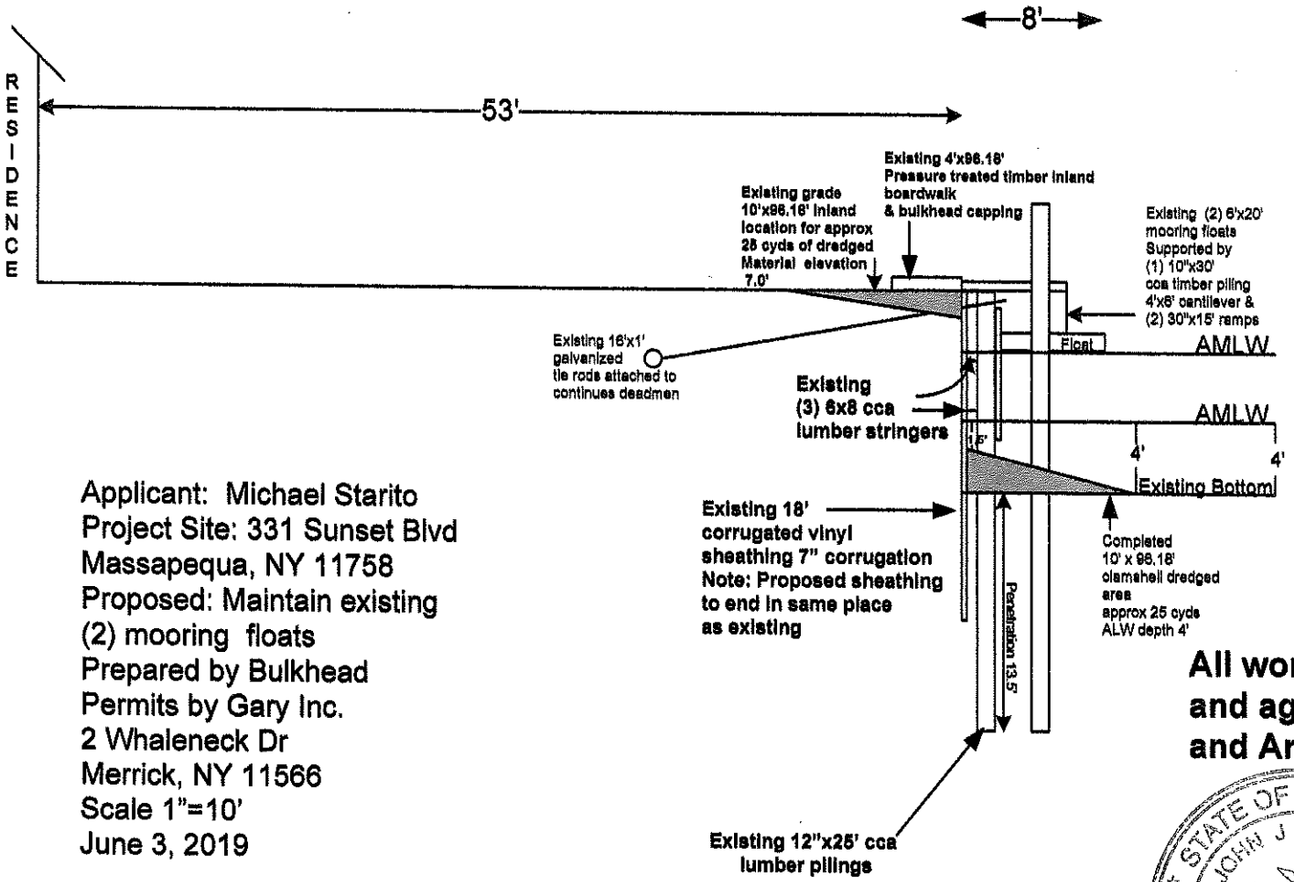

Applicant: Michael Starito
Project Site: 331 Sunset Blvd
Massapequa, NY 11758
Proposed: Maintain existing
(2) mooring floats
Prepared by Bulkhead
Permits by Gary Inc.
2 Whaleneck Dr
Merrick, NY 11566
Scale 1"=10'
June 3, 2019

All work completed as per terms and agreement with NYSDEC and Army Corps of Engineers

STATE OF NEW YORK
JOHN J WEIBURG
071117
LICENSED PROFESSIONAL ENGINEER

19070100

617.20

Appendix C
State Environmental Quality Review
SHORT ENVIRONMENTAL ASSESSMENT FORM
For UNLISTED ACTIONS Only

PART I - PROJECT INFORMATION (To be completed by Applicant or Project Sponsor)

1. APPLICANT/SPONSOR
Annette Perea

2. PROJECT NAME
Perea Project

3. PROJECT LOCATION:
Municipality Oyster Bay County Nassau

4. PRECISE LOCATION (Street address and road intersections, prominent landmarks, etc., or provide map)
331 Sunset Blvd Massapequa NY 11758

5. PROPOSED ACTION IS:
☑ New ☐ Expansion ☐ Modification/alteration

6. DESCRIBE PROJECT BRIEFLY:
Bulkhead replacement in same place wih an 18" increase in elevation, dredging & (2) mooring floats

7. AMOUNT OF LAND AFFECTED:
Initially _____ acres Ultimately _____ acres

8. WILL PROPOSED ACTION COMPLY WITH EXISTING ZONING OR OTHER EXISTING LAND USE RESTRICTIONS?
☑ Yes ☐ No If No, describe briefly

9. WHAT IS PRESENT LAND USE IN VICINITY OF PROJECT?
☑ Residential ☐ Industrial ☐ Commercial ☐ Agriculture ☐ Park/Forest/Open Space ☐ Other
Describe:

10. DOES ACTION INVOLVE A PERMIT APPROVAL, OR FUNDING, NOW OR ULTIMATELY FROM ANY OTHER GOVERNMENTAL AGENCY (FEDERAL, STATE OR LOCAL)?
☑ Yes ☐ No If Yes, list agency(s) name and permit/approvals:
Town of Oyster Bay

11. DOES ANY ASPECT OF THE ACTION HAVE A CURRENTLY VALID PERMIT OR APPROVAL?
☐ Yes ☑ No If Yes, list agency(s) name and permit/approvals:

12. AS A RESULT OF PROPOSED ACTION WILL EXISTING PERMIT/APPROVAL REQUIRE MODIFICATION?
☐ Yes ☑ No

I CERTIFY THAT THE INFORMATION PROVIDED ABOVE IS TRUE TO THE BEST OF MY KNOWLEDGE
Applicant/sponsor name: Annette Perea Date: 9/30/12
Signature:

If the action is in the Coastal Area, and you are a state agency, complete the Coastal Assessment Form before proceeding with this assessment

Reset

19070105

1. Holland Family
364 Riviera Dr South
Massapequa NY

2. Mazziota Family
359 Sunset Blvd
Massapequa NY

3. Johnson Family
327 Sunset Blvd
Massapequa NY

4. Dic Family
325 Sunset Blvd
Massapequa NY

5. Connelly Family
321 Sunset Blvd
Massapequa NY

Applicant: Michael Starito
Project Site: 331 Sunset Blvd
Massapequa, NY 11758
Proposed: Maintain existing (2) mooring floats completed bulkhead installation
Prepared by Bulkhead Permits by Gary Inc.
2 Whaleneck Dr
Merrick, NY 11566
Scale 1"=120'
June 3, 2019

DEPARTMENT OF THE ARMY
NEW YORK DISTRICT, CORPS OF ENGINEERS
JACOB K. JAVITS FEDERAL BUILDING
NEW YORK, N.Y. 10278-0090

APR 01 2013

REPLY TO
ATTENTION OF:
Regulatory Branch - Eastern Section

SUBJECT: Department of Army Permit Number NAN-2013-00126
Issued to Annette Perea

Annette Perea
331 Sunset Blvd
Massapequa, New York

Dear Ms. Perea:

We have completed our review of Application Number NAN-2012-00126-EMN.

Pursuant to Section 10 of the Rivers and Harbors Act of 1899 (33 USC 403), you are hereby authorized by the Secretary of the Army:

ACTIVITY: Construction of one 2.5-foot-wide by 15-foot-long ramp leading to one 6-foot-wide by 20-foot-long mooring float.

Under authority of the Nationwide General Permit Program, Numbers 3 and 19, relocate one 4-foot-wide by 6-foot-long cantilever deck, one 2.5-foot-wide by 15-foot-long ramp and one 6-foot-wide by 20-foot-long mooring float; replace 97 linear feet of existing bulkhead, in place, 18-inches higher than existing; and dredge a 10-foot-wide by 96-foot-long area to a depth of 4 feet below Mean Low Water with placement of up to 25 cubic yards of material behind the bulkhead. The nationwide permits are prescribed as a Reissuance of Nationwide Permits in the Federal Register dated February 21, 2012 (77 FR 10184). The work may be performed without further authorization from this office provided the activity complies with the permit conditions listed in Section B, Nos. 3 and 19, Section C, any applicable New York District regional conditions, the attached special conditions and any applicable regional conditions added by the State of New York, copies enclosed.

All work shall be done in accordance with the attached plans, subject to Special Condition A, which are hereby made part of this permit.

WATERWAY: North Canal

LOCATION: Massapequa, Town of Oyster Bay, Nassau County, New York

The activities authorized herein must be completed within three years of the date of this permit. This authorization is subject to the enclosed conditions. Please find enclosed two forms to be used to submit to this office, as required, the dates of commencement and completion for the authorized activity.

Please note that the above authorizations are based on a preliminary jurisdictional determination (JD). A preliminary JD is not appealable. If you wish, prior to commencement of the authorized work you may request an approved JD, which may be appealed, by contacting the New York District, U.S. Army Corps of Engineers for further instruction. To assist you in this decision and address any questions you may have on the differences between preliminary and approved jurisdictional determinations, please review U.S. Army Corps of Engineers Regulatory Guidance Letter No. 08-02, which can be found at:

http://www.usace.army.mil/Portals/2/docs/civilworks/RGLS/rgl08-02.pdf

This letter contains an initial proffered permit for your activity. If you object to this permit decision because of certain terms and conditions therein, you may request that the permit be modified accordingly under Corps regulations at 33 CFR 331. Enclosed you will find a combined Notification of Appeal Process (NAP) and Request for Appeal (RFA) form. If you object to this permit decision you must submit a completed RFA form to the New York District Office at:

Jodi M. McDonald
Chief, Regulatory Branch
New York District Corps of Engineers
26 Federal Plaza, Room 1937
New York, New York 10278-0090

In order for an RFA to be accepted by the Corps, the Corps

must determine that it is complete, that it meets the criteria for appeal under 33 CFR Part 331.5, and that it has been received by the District Office within 60 days of the date of the NAP. Should you decide to submit an RFA form, it must be received at the above address by JUN 0 1 2013. It is not necessary to submit an RFA form to the District Office if you do not object to the permit decision in this letter.

The authorized activity must be performed in accordance with the enclosed plans. If any material changes in the location or plans of the subject work are found necessary, revised plans should be submitted to the District Engineer. These plans must receive the approval required by law before work begins.

Notice is hereby given that the permittee should recognize that a possibility exists that the structures permitted herein may be subject to wavewash from passing vessels. The issuance of this permit does not relieve the permittee from taking all proper steps to insure the integrity of the structures permitted herein and the safety of boats moored thereto from damage by wavewash and the permittee shall not hold the United States liable for any such damage.

In order for us to better serve you, please complete our Customer Service Survey located at http://per2.nwp.usace.army.mil/survey.html

If any questions should arise concerning this matter, please contact Shannon K. McNamara, of my staff, at (917) 790-8514.

Sincerely,

For and in behalf of

Paul E. Owen
Colonel, U.S. Army
Commander

Enclosures

PERMITTEE: Annette Perea
PERMIT NO.: NAN-2013-00126

PERMIT CONDITIONS:

NOTE: The term "you" and its derivatives, as used in this permit means the permittee or any future transferee. The term "this office" refers to the appropriate district or division office of the Corps of Engineers having jurisdiction over the permitted activity or appropriate official of that office acting under the authority of the commanding officer.

GENERAL CONDITIONS:

1. The time limit for completing the work authorized ends within three years of the date of this permit. If you find that you need more time to complete the authorized activity, submit your request for a time extension to this office for consideration at least four months before the date is reached.

2. You must maintain the activity authorized by this permit in good condition and in conformance with the terms and conditions of this permit. You are not relieved of this requirement if you abandon the permitted activity, although you may make a good faith transfer to a third party upon written notification to this office. Should you wish to cease to maintain the authorized activity or should you desire to abandon it without a good faith transfer, you must obtain a modification of this permit from this office, which may require restoration of the area.

3. If you discover any previously unknown historic or archeological remains while accomplishing the activity authorized by this permit, you must immediately notify this office of what you have found. We will initiate the Federal and state coordination required to determine if the remains warrant a recovery effort or if the site is eligible for listing in the National Register of Historic Places.

4. You must allow representatives from this office to inspect the authorized activity at any time deemed necessary to ensure that it is being or has been accomplished in accordance with the terms and conditions of your permit.

PERMITTEE: Annette Perea
PERMIT NO.: NAN-2013-00126

Special Condition:

(A) The permittee understands and agrees that, if future operations by the United States require the removal, relocation, or other alteration, of the structure or work herein authorized, or if, in the opinion of the Secretary of the Army or his authorized representative, said structure or work shall cause unreasonable obstruction to the free navigation of the navigable waters, the permittee will be required, upon due notice from the Corps of Engineers, to remove, relocate, or alter the structural work or obstructions caused thereby, without expense to the United States. No claim shall be made against the United States on account of any such removal or alteration.

Further Information:

1. Limits of authorization.

a. This permit does not obviate the need to obtain other Federal, state, or local authorizations required by law.

b. This permit does not grant any property rights or exclusive privileges.

c. This permit does not authorize any injury to the property or rights of others.

d. This permit does not authorize interference with any existing or proposed Federal project.

2. Limits to Federal Liability. In issuing this permit, the Federal Government does not assume any liability for the following:

a. Damages to the permitted project or uses thereof as a result of other permitted or unpermitted activities or from natural causes.

b. Damages to the permitted project or uses thereof as result of current or future activities undertaken by or on behalf of the United States in the public interest.

c. Damages to persons, property, or to other permitted or unpermitted activities or structures caused by the activity authorized by this permit.

d. Design or construction deficiencies associated with the permitted work.

e. Damage claims associated with any future modification, suspension, or revocation of this permit.

3. Reliance on Applicant's Data: The determination of this office that issuance of this permit is not contrary to the public interest was made in reliance on the information you provided.

4. Reevaluation of Permit Decision: This office may reevaluate its decision on this permit at any time the circumstances warrant. Circumstances that could require a reevaluation include, but are not limited to, the following:

a. You fail to comply with the terms and conditions of the permit.

b. The information provided by you in support of your permit application proves to have been false, incomplete, or inaccurate (See 3 above).

c. Significant new information surfaces which this office did not consider in reaching the original public interest decision.

Such a reevaluation may result in a determination that it is appropriate to use the suspension, modification, and revocation procedures contained in 33 CFR 325.7 or enforcement procedures such as those contained in 33 CFR 326.4 and 326.5. The referenced enforcement procedures provide for the issuance of an administrative order requiring you to comply with the terms and conditions of your permit and for the initiation of legal action where appropriate. You will be required to pay for any corrective measures ordered by this office, and if you fail

to comply with such directive, this office may in certain situations (such as those specified in 33 CFR 209.170) accomplish the corrective measures by contract or otherwise and bill you for the cost.

5. Extensions. General condition 1 establishes a time limit for the completion of the activity authorized by this permit. Unless there are circumstances requiring either a prompt completion of the authorized activity or a reevaluation of the public interest decision, the Corps will normally give favorable consideration to a request for an extension of this time limit.

Applicant: Annette Perea
Project Site: 331 Sunset Blvd
Massapequa, NY 11758
Proposed: Navy bulkhead replacement in same place with an 18" increase in elevation, dredging, (2) mooring floats & boat lift
Prepared by Bulkhead Permits by Gary Inc.
2 Whaleneck Dr
Merrick, NY 11566
Scale 1"=30'
October 2, 2012

APR 0 1 2013

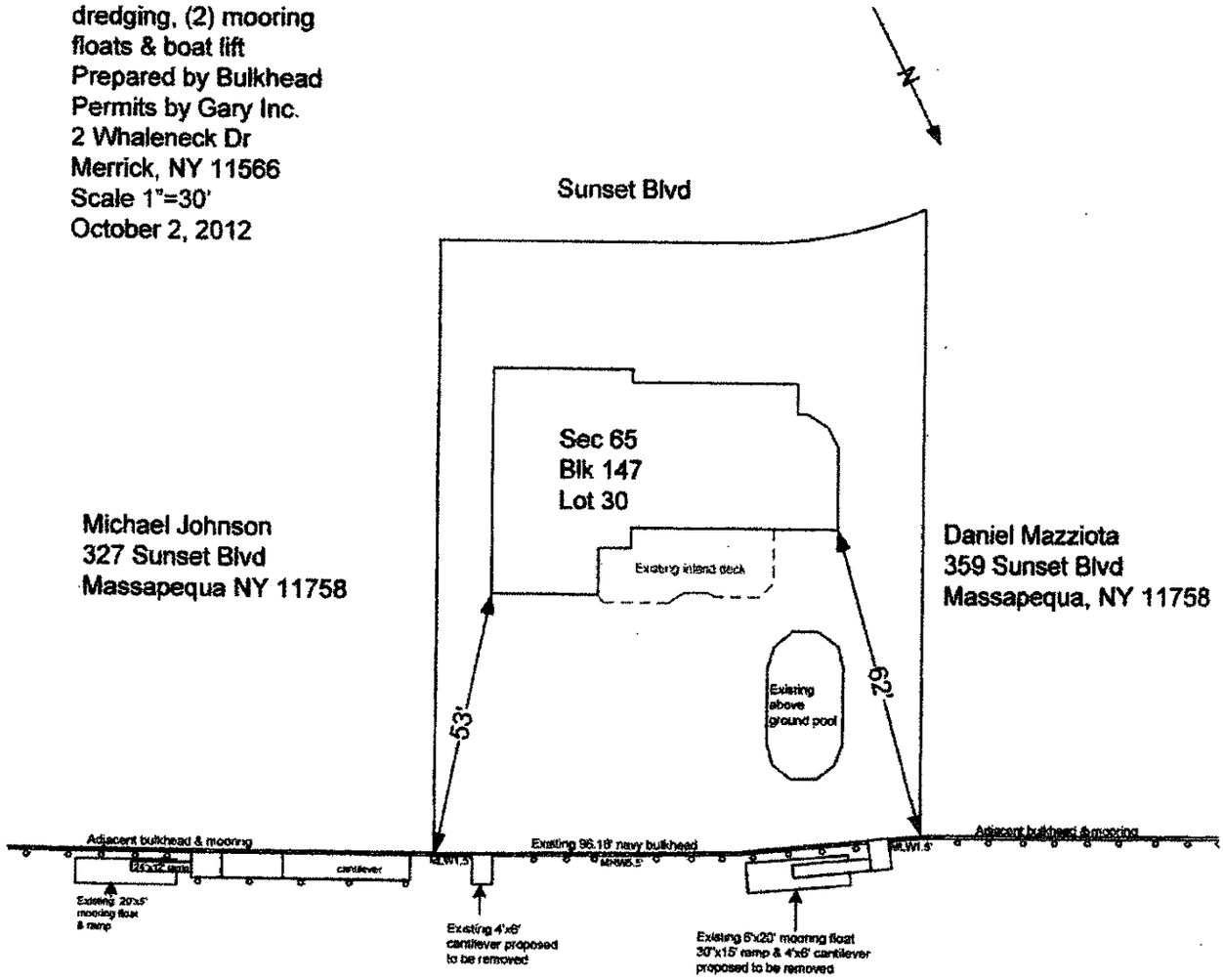

North Canal
Width 100'
Flood
Ebb

19070106

Applicant: Annette Perea
Project Site: 331 Sunset Blvd
Massapequa, NY 11758
Proposed: Navy bulkhead replacement in same place with an 18" increase in elevation, dredging, (2) mooring Floats
Prepared by Bulkhead Permits by Gary Inc.
2 Whaleneck Dr
Merrick, NY 11566
Scale 1"=30'
October 2, 2012

Perea Docking & Maintenance Plans
NAN-2013-00126
page 3 of 4

APR 0 1 2013

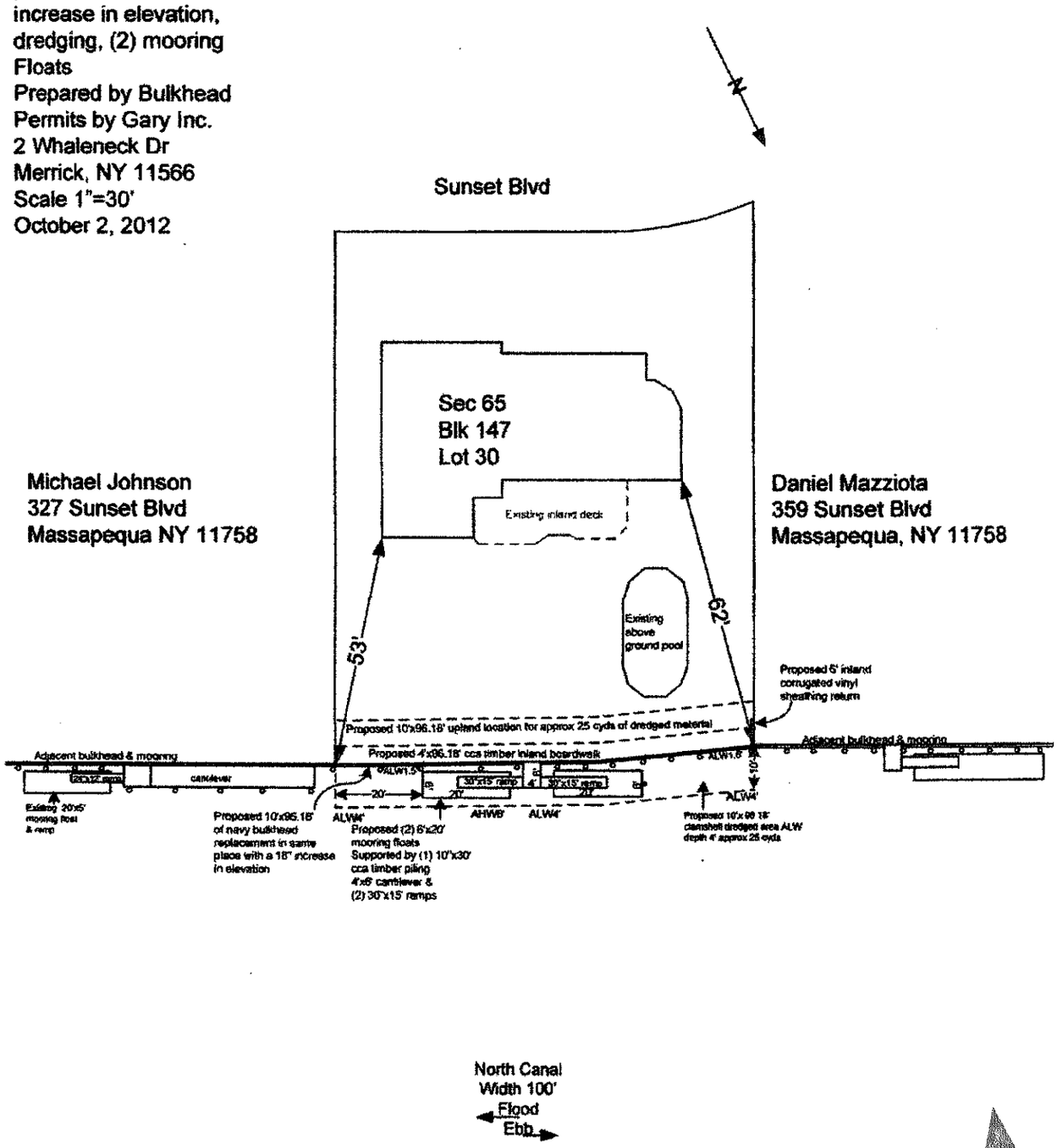

18070106

are, nails and bolts shall be hot dip galvanized, all bolt heads and nuts will be used with cut washers. All timber will be cca treated marine grade. All sheathing Shore guard corrugated vinyl marine grade

CROSS VIEW

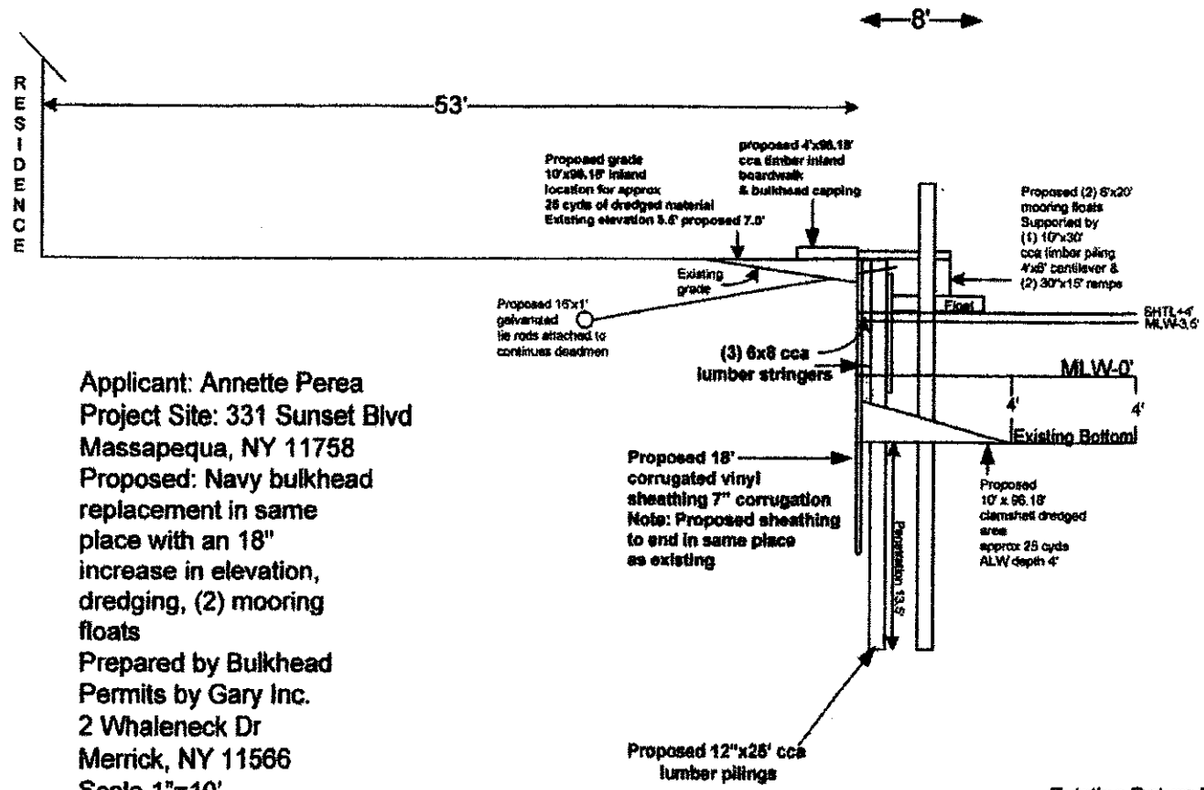

Applicant: Annette Perea
Project Site: 331 Sunset Blvd
Massapequa, NY 11758
Proposed: Navy bulkhead replacement in same place with an 18" increase in elevation, dredging, (2) mooring floats
Prepared by Bulkhead Permits by Gary Inc.
2 Whaleneck Dr
Merrick, NY 11566
Scale 1"=10'
October 2, 2012

Existing Datum MLW -0'
MHW +3.5'
SHTL +4'
or as shown

APR 0 1 2013

Google

Address 331 Sunset Blvd
Massapequa, NY 11758

Perea Docking & Maintenance Plans
NAN-2013-00126

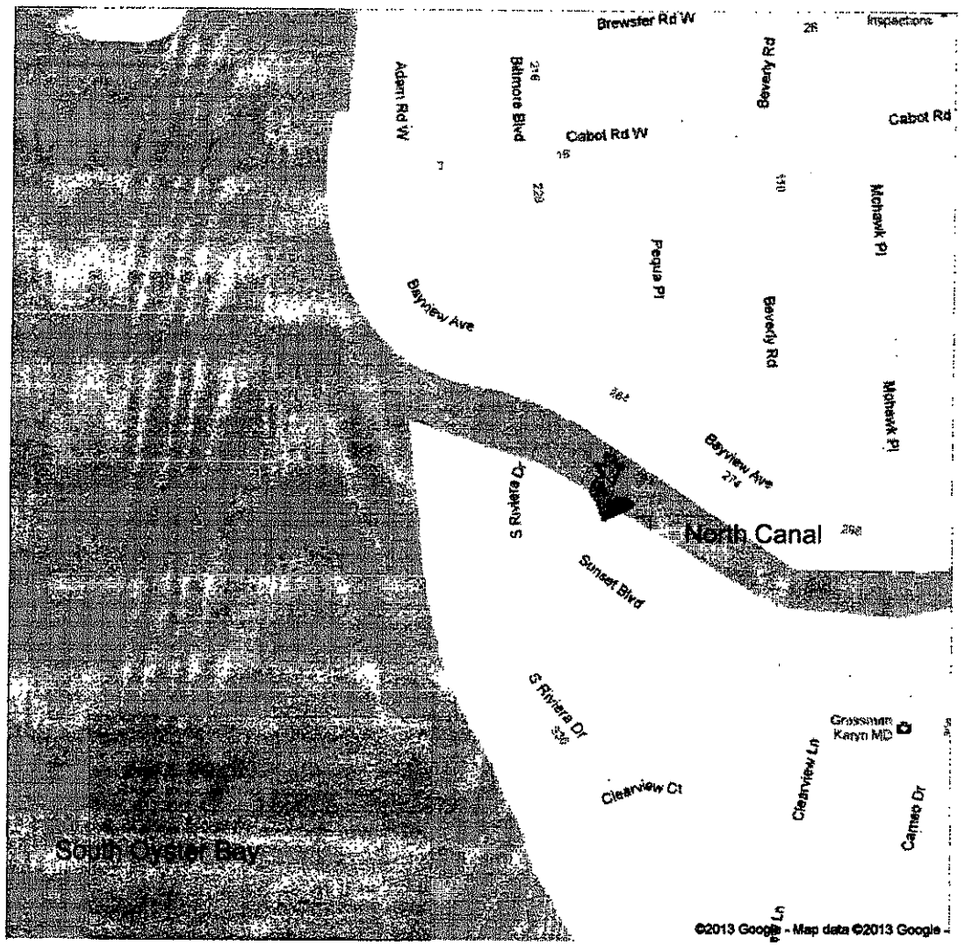

19070100

New York State Department of Environmental Conservation
Division of Environmental Permits, Region 1
SUNY @ Stony Brook
50 Circle Road, Stony Brook, NY 11790-3409
Phone: (631) 444-0365 • **Fax:** (631) 444-0360
Website: www.dec.ny.gov

January 7, 2013

Ms. Annette Perea
331 Sunset Dr
Massapequa, NY 11758

Re: Permit #1-2824-02965/00001

Dear Ms. Perea :

In conformance with the requirements of the State Uniform Procedures Act (Article 70, ECL) and its implementing regulations (6NYCRR, Part 621) we are enclosing your permit. Please carefully read all permit conditions and special permit conditions contained in the permit to ensure compliance during the term of the permit. If you are unable to comply with any conditions please contact us at the above address.

Also enclosed is a permit sign which is to be conspicuously posted at the project site and protected from the weather.

Sincerely,

Sherri L. Aicher

Sherri L. Aicher
Senior Environmental Analyst

SLA/np

190

PERMIT

Under the Environmental Conservation Law (ECL)

Permittee and Facility Information

Permit Issued To:
ANNETTE PEREA
331 SUNSET DR
MASSAPEQUA, NY 11758
(917) 769-9610

Facility:
PEREA PROPERTY
331 SUNSET DR|NCTM 65-147-30
MASSAPEQUA, NY 11758

Facility Application Contact:
BULKHEAD PERMITS BY GARY INC
2 WHALENECK DR
MERRICK, NY 11566
(516) 546-3479

Facility Location: in OYSTER BAY in NASSAU COUNTY
Facility Principal Reference Point: NYTM-E: 629.601 NYTM-N: 4501.331
Latitude: 40°39'09.6" Longitude: 73°28'01.4"
Authorized Activity: Reconstruct in-place 96 linear feet of existing, functional bulkheading, 18" higher than the original. Reconstruct, in-place or landward, existing or construct new bulkhead returns. Reconstruct existing, or construct new parallel capping boardwalk landward of bulkhead. Maintenance dredge the the area up to 10 feet seaward of the bulkhead to maximum depth -4 MLW. Use dredged material as backfill for reconstructed bulkhead only. Remove existing platforms, ramp and float. Install new 4' x 6' platform, two 30" x 15' ramps, and two 6' x 20' floats. All authorized activities shall be done in strict conformance with the attached plans stamped "NYSDEC Approved" on January 4, 2013. **SAP-1-08-12.**

Permit Authorizations

Tidal Wetlands - Under Article 25
Permit ID 1-2824-02965/00001
New Permit Effective Date: 1/4/2013 Expiration Date: 1/4/2018
Water Quality Certification - Under Section 401 - Clean Water Act
Permit ID 1-2824-02965/00002
New Permit Effective Date: 1/4/2013 Expiration Date: 1/4/2018
Excavation & Fill in Navigable Waters - Under Article 15, Title 5
Permit ID 1-2824-02965/00003
New Permit Effective Date: 1/4/2013 Expiration Date: 1/4/2018

NYSDEC Approval

By acceptance of this permit, the permittee agrees that the permit is contingent upon strict compliance with the ECL, all applicable regulations, and all conditions included as part of this permit.

Permit Administrator: GEORGE W HAMMARTH, Deputy Regional Permit Administrator
Address: SLA
NYSDEC REGION 1 HEADQUARTERS
SUNY @ STONY BROOK|50 CIRCLE RD
STONY BROOK, NY 11790 -3409

Authorized Signature: George W. Hammarth Date 1/10/13

Distribution List

BULKHEAD PERMITS BY GARY INC
Habitat - TW
SHERRI L AICHER

Permit Components

NATURAL RESOURCE PERMIT CONDITIONS

WATER QUALITY CERTIFICATION SPECIFIC CONDITION

GENERAL CONDITIONS, APPLY TO ALL AUTHORIZED PERMITS

NOTIFICATION OF OTHER PERMITTEE OBLIGATIONS

NATURAL RESOURCE PERMIT CONDITIONS - Apply to the Following Permits: TIDAL WETLANDS; WATER QUALITY CERTIFICATION; EXCAVATION & FILL IN NAVIGABLE WATERS

1. Regulated Activities Authorized By This Permit This permit authorizes only those regulated activities / structures identified under the section Description of Authorized Activity. NYSDEC does not issue after-the-fact or as-built permits. This permit does not authorize activities, or legitimize the existence of structures, which would have required a permit but for which no permit or other authorization has been granted by NYSDEC.

2. Conformance With Plans All activities authorized by this permit must be in strict conformance with the approved plans submitted by the applicant or applicant's agent as part of the permit application. Such approved plans were prepared by Bulkhead Permits by Gary Inc. last revised October 2, 2012 and stamped "NYSDEC Approved" on January 4, 2013.

3. **Notice of Commencement** At least 48 hours prior to commencement of the project, the permittee and contractor shall sign and return the top portion of the enclosed notification form certifying that they are fully aware of and understand all terms and conditions of this permit. Within 30 days of completion of project, the bottom portion of the form must also be signed and returned, along with photographs of the completed work.

4. **Post Permit Sign** The permit sign enclosed with this permit shall be posted in a conspicuous location on the worksite and adequately protected from the weather.

5. **Failure to Meet Permit Conditions** Failure of the permittee to meet all the conditions of this permit is a violation of this permit and grounds for an order to immediately cease the permitted activity at the project site.

6. **Excavation for Bulkhead/Structure** Prior to any construction or removal of bulkheads and other shoreline stabilization structures all backfill shall be excavated landward of the structure and retained so as not to enter the waterway, tidal wetland or protected buffer area.

7. **Replacement Bulkhead Maximum Height** The top elevation of the replacement bulkhead shall be no more than 18 inches higher than the existing bulkhead.

8. **No Seaward Extension of Bulkhead** The new bulkhead shall be constructed in place of the existing bulkhead with no seaward extension of the outermost bulkhead face.

9. **Jet-in Bulkhead** Bulkheads constructed directly adjacent to vegetated tidal wetlands shall be hand driven or jetted in with no disturbance to the tidal wetland. Trenching is strictly prohibited.

10. **Backfilling** The installation of the approved replacement bulkhead shall be completed prior to the placement of any fill material behind the structure.

11. **Clean Fill Only** All fill shall consist of clean sand, gravel, or soil (not asphalt, slag, flyash, broken concrete or demolition debris).

12. **No Runoff Over or Through Bulkhead or into Wetland** Upon completion of the bulkhead replacement authorized herein, there shall be no discharge of runoff or other effluent over or through the structure or into any tidal wetland or protected buffer area.

13. **Use of Treated Wood** The use of wood treated with creosote, pentachlorophenol or other wood treatment not specifically approved by the department for use in wetlands and/or marine waters, is strictly prohibited in the construction of structures that will be in contact with tidal waters.

14. **Parallel Capping Boardwalk** The width of the parallel capping boardwalk shall not exceed six (6) feet. No portion of the boardwalk shall extend seaward of the most seaward face of the bulkhead sheathing.

15. **Seeding Disturbed Areas** All areas of soil disturbance resulting from the approved project shall be stabilized with appropriate vegetation (grasses, etc.) immediately following project completion or prior to permit expiration, whichever comes first. If the project site remains inactive for more than 48 hours or planting is impractical due to the season, then the area shall be stabilized with straw or hay mulch or jute matting until weather conditions favor germination.

16. **Temporary Mulch, Final Seeding** If seeding is impracticable due to the time of year, a temporary mulch shall be applied and final seeding shall be performed at the earliest opportunity when weather conditions favor germination and growth but not more than six months after project completion.

17. **Property Line Setback** Any mooring structures installed under the authority of this permit must be located a minimum of 10 feet from property lines.

18. **Float Installation** The float shall be installed only at the approved location with a minimum water depth of 2 1/2 feet, measured at mean low low water (-2.5 MLLW).

19. **Floats at Property Lines** Floats installed under the authority of this permit must not:

A. Be placed so that docked boats extend laterally over adjacent property lines.

B. Interfere with navigation.

C. Interfere with other landowners riparian rights.

20. **Pilings at Property Lines** Pilings shall not:

a. extend laterally beyond property lines,

b. interfere with navigation, or

c. interfere with other landowners riparian rights.

21. **No Permanent Structures on Float** No permanent structures shall be installed on the float without first obtaining written Department approval (permit, modification, or amendment).

22. **No Floats, Ramps in Vegetated Tidal Wetlands** Floats and ramps may not rest on or be stored in any vegetated tidal wetland.

23. **No Structures on Reconstructed Bulkhead or Pilings** No structures, other than structures specifically authorized by this permit, shall be constructed on the reconstructed bulkhead or pilings without further authorization from the department (new permit, modified permit).

24. **Seasonal Dock Removal** The portion of the dock seaward of bulkhead may be removed and replaced seasonally at the permittee's discretion to prevent ice damage to the structure and damage to the tidal wetlands from ice and storm debris. The permittee will be responsible for restoring any tidal wetland areas that are damaged by any portion of the authorized structure that has not been removed for the winter season upon notification and written approval (permit, modification or amendment) from the department.

25. **Dredgings to Remain On-Site/Within Wetland** Dredge material approved to remain on-site and/or within the NYSDEC Tidal Wetlands jurisdiction shall be retained so as not to enter any water body, tidal wetlands, or protected buffer areas. Off-site, upland disposal of dredged material beyond NYSDEC Tidal Wetland jurisdiction requires the additional guidance of the Division of Solid and Hazardous Materials (631) 444-0375 and is not covered by this permit.

26. **Restrict Spillage, Use Closed Bucket** During the dredging operation, the permittee and his contractor shall prevent spillage of sediment during excavation and haulage. Dredging shall be accomplished with a clam shell or other closed bucket equipment.

27. **No Prop Dredging** Prop dredging, or the act of utilizing and/or directing the propeller or propulsion system of a motorized vessel and/or the water-borne forces created by said propeller or propulsion system, to excavate or displace existing bottom sediment and benthic habitat for the direct or indirect purpose of establishing or increasing water depth, is a regulated activity and is not authorized by this permit. Prop dredging is strictly prohibited without further written authorization (permit, modification or amendment) from the department.

28. **No Side-casting of Dredged Material** Excavated sediment shall be placed directly into the approved work area landward of the replacement bulkhead. No side-casting (double dipping) of dredged material is authorized.

29. **Leave a Uniform Bottom Elevation** All dredging shall be conducted so as to leave a uniform bottom elevation free of mounds or holes.

30. **Dragline Prohibited** The use of a dragline for dredging is strictly prohibited.

31. **Storage of Equipment, Materials** The storage of construction equipment and materials shall be confined to the upland area landward of the bulkhead or on a barge.

32. **No Disturbance to Vegetated Tidal Wetlands** There shall be no disturbance to vegetated tidal wetlands or protected buffer areas as a result of the permitted activities.

33. **No Construction Debris in Wetland or Adjacent Area** Any debris or excess material from construction of this project shall be completely removed from the adjacent area (upland) and removed to an approved upland area for disposal. No debris is permitted in wetlands and/or protected buffer areas.

34. **No Interference With Navigation** There shall be no unreasonable interference with navigation by the work herein authorized.

35. **State Not Liable for Damage** The State of New York shall in no case be liable for any damage or injury to the structure or work herein authorized which may be caused by or result from future operations undertaken by the State for the conservation or improvement of navigation, or for other purposes, and no claim or right to compensation shall accrue from any such damage.

36. **State May Order Removal or Alteration of Work** If future operations by the State of New York require an alteration in the position of the structure or work herein authorized, or if, in the opinion of the Department of Environmental Conservation it shall cause unreasonable obstruction to the free navigation of said waters or flood flows or endanger the health, safety or welfare of the people of the State, or cause loss or destruction of the natural resources of the State, the owner may be ordered by the Department to remove or alter the structural work, obstructions, or hazards caused thereby without expense to the State, and if, upon the expiration or revocation of this permit, the structure, fill, excavation, or other modification of the watercourse hereby authorized shall not be completed, the owners, shall, without expense to the State, and to such extent and in such time and manner as the Department of Environmental Conservation may require, remove all or any portion of the uncompleted structure or fill and restore to its former condition the navigable and flood capacity of the watercourse. No claim shall

be made against the State of New York on account of any such removal or alteration.

37. **Precautions Against Contamination of Waters** All necessary precautions shall be taken to preclude contamination of any wetland or waterway by suspended solids, sediments, fuels, solvents, lubricants, epoxy coatings, paints, concrete, leachate or any other environmentally deleterious materials associated with the project.

38. **State May Require Site Restoration** If upon the expiration or revocation of this permit, the project hereby authorized has not been completed, the applicant shall, without expense to the State, and to such extent and in such time and manner as the Department of Environmental Conservation may lawfully require, remove all or any portion of the uncompleted structure or fill and restore the site to its former condition. No claim shall be made against the State of New York on account of any such removal or alteration.

WATER QUALITY CERTIFICATION SPECIFIC CONDITIONS

1. **Water Quality Certification** The NYS Department of Environmental Conservation hereby certifies that the subject project will not contravene effluent limitations or other limitations or standards under Sections 301, 302, 303, 306 and 307 of the Clean Water Act of 1977 (PL 95-217) provided that all of the conditions listed herein are met.

GENERAL CONDITIONS - Apply to ALL Authorized Permits:

1. **Facility Inspection by The Department** The permitted site or facility, including relevant records, is subject to inspection at reasonable hours and intervals by an authorized representative of the Department of Environmental Conservation (the Department) to determine whether the permittee is complying with this permit and the ECL. Such representative may order the work suspended pursuant to ECL 71- 0301 and SAPA 401(3).

The permittee shall provide a person to accompany the Department's representative during an inspection to the permit area when requested by the Department.

A copy of this permit, including all referenced maps, drawings and special conditions, must be available for inspection by the Department at all times at the project site or facility. Failure to produce a copy of the permit upon request by a Department representative is a violation of this permit.

2. **Relationship of this Permit to Other Department Orders and Determinations** Unless expressly provided for by the Department, issuance of this permit does not modify, supersede or rescind any order or determination previously issued by the Department or any of the terms, conditions or requirements contained in such order or determination.

3. **Applications For Permit Renewals, Modifications or Transfers** The permittee must submit a separate written application to the Department for permit renewal, modification or transfer of this permit. Such application must include any forms or supplemental information the Department requires. Any renewal, modification or transfer granted by the Department must be in writing. Submission of

applications for permit renewal, modification or transfer are to be submitted to:

Regional Permit Administrator
NYSDEC REGION 1 HEADQUARTERS
SUNY @ STONY BROOK|50 CIRCLE RD
STONY BROOK, NY11790 -3409

4. **Submission of Renewal Application** The permittee must submit a renewal application at least 30 days before permit expiration for the following permit authorizations: Tidal Wetlands, Water Quality Certification, Excavation & Fill in Navigable Waters.

5. **Permit Modifications, Suspensions and Revocations by the Department** The Department reserves the right to exercise all available authority to modify, suspend or revoke this permit. The grounds for modification, suspension or revocation include:

a. materially false or inaccurate statements in the permit application or supporting papers;

b. failure by the permittee to comply with any terms or conditions of the permit;

c. exceeding the scope of the project as described in the permit application;

d. newly discovered material information or a material change in environmental conditions, relevant technology or applicable law or regulations since the issuance of the existing permit;

e. noncompliance with previously issued permit conditions, orders of the commissioner, any provisions of the Environmental Conservation Law or regulations of the Department related to the permitted activity.

6. **Permit Transfer** Permits are transferrable unless specifically prohibited by statute, regulation or another permit condition. Applications for permit transfer should be submitted prior to actual transfer of ownership.

NOTIFICATION OF OTHER PERMITTEE OBLIGATIONS

Item A: Permittee Accepts Legal Responsibility and Agrees to Indemnification
The permittee, excepting state or federal agencies, expressly agrees to indemnify and hold harmless the Department of Environmental Conservation of the State of New York, its representatives, employees, and agents ("DEC") for all claims, suits, actions, and damages, to the extent attributable to the permittee's acts or omissions in connection with the permittee's undertaking of activities in connection with, or operation and maintenance of, the facility or facilities authorized by the permit whether in compliance or not in compliance with the terms and conditions of the permit. This indemnification does not extend to any claims, suits, actions, or damages to the extent attributable to DEC's own negligent or intentional acts or omissions, or to any claims, suits, or actions naming the DEC and arising under Article 78 of the New York Civil Practice Laws and Rules or any citizen suit or civil rights provision under federal or state laws.

Item B: Permittee's Contractors to Comply with Permit
The permittee is responsible for informing its independent contractors, employees, agents and assigns of their responsibility to comply with this permit, including all special conditions while acting as the permittee's agent with respect to the permitted activities, and such persons shall be subject to the same sanctions for violations of the Environmental Conservation Law as those prescribed for the permittee.

Item C: Permittee Responsible for Obtaining Other Required Permits
The permittee is responsible for obtaining any other permits, approvals, lands, easements and rights-of-way that may be required to carry out the activities that are authorized by this permit.

Item D: No Right to Trespass or Interfere with Riparian Rights
This permit does not convey to the permittee any right to trespass upon the lands or interfere with the riparian rights of others in order to perform the permitted work nor does it authorize the impairment of any rights, title, or interest in real or personal property held or vested in a person not a party to the permit.

Applicant: Annette Perea
Project Site: 331 Sunset Blvd
Massapequa, NY 11758
Proposed: Navy bulkhead replacement in same place with an 18" increase in elevation, dredging, (2) mooring floats & boat lift
Prepared by Bulkhead Permits by Gary Inc.
2 Whaleneck Dr
Merrick, NY 11566
Scale 1"=30'
October 2, 2012

Project Plan
Proposed
Page 1 of 3

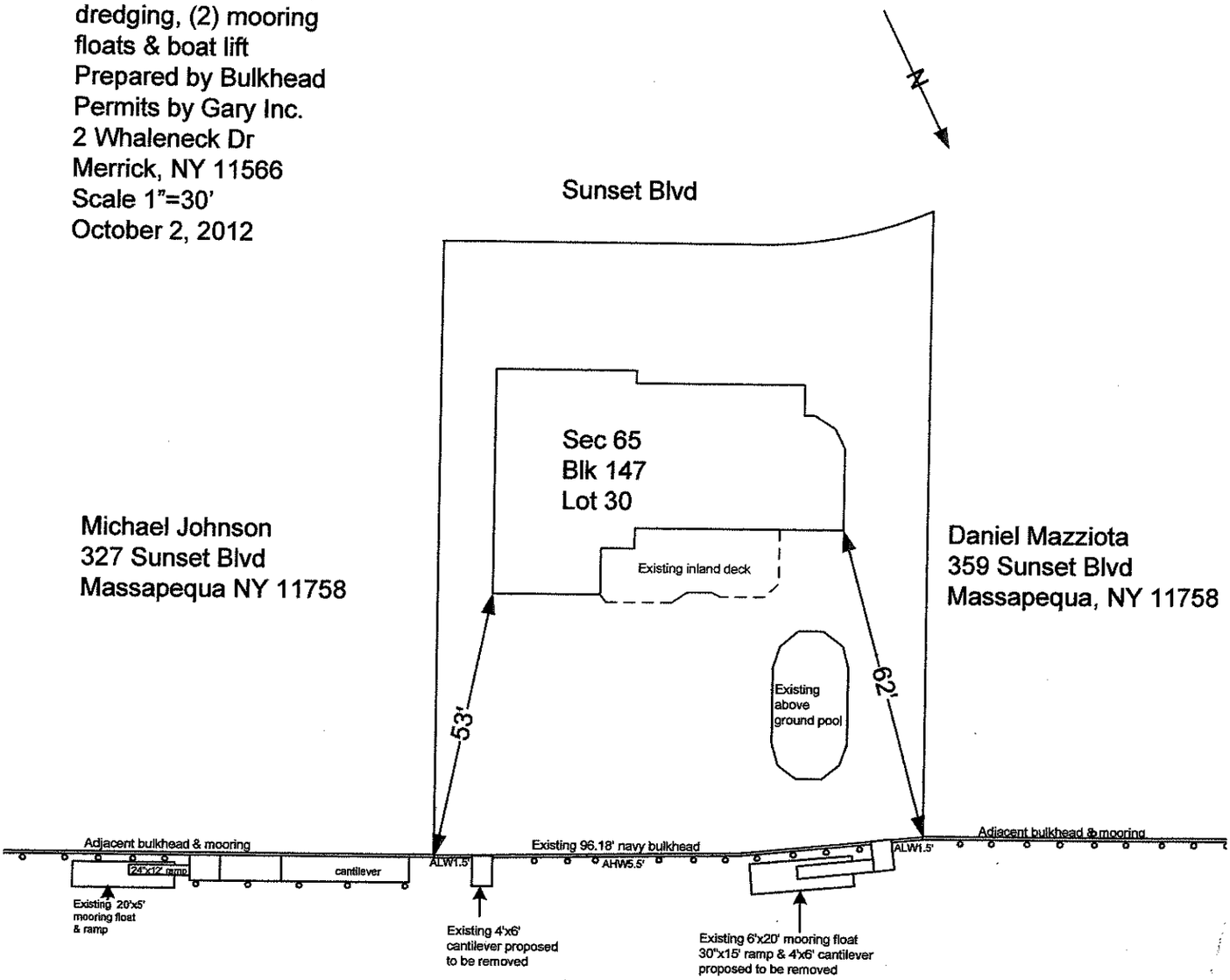

North Canal
Width 100'
Flood
Ebb

NYSDEC
APPROVED AS PER TERMS
AND CONDITIONS OF
PERMIT NO. 1-2824-02965/00001
DATE January 4, 2013
SA

Applicant: Annette Perea
Project Site: 331 Sunset Blvd
Massapequa, NY 11758
Proposed: Navy bulkhead replacement in same place with an 18" increase in elevation, dredging, (2) mooring Floats
Prepared by Bulkhead Permits by Gary Inc.
2 Whaleneck Dr
Merrick, NY 11566
Scale 1"=30'
October 2, 2012

Project Plan
Proposed
Page 2 of 3

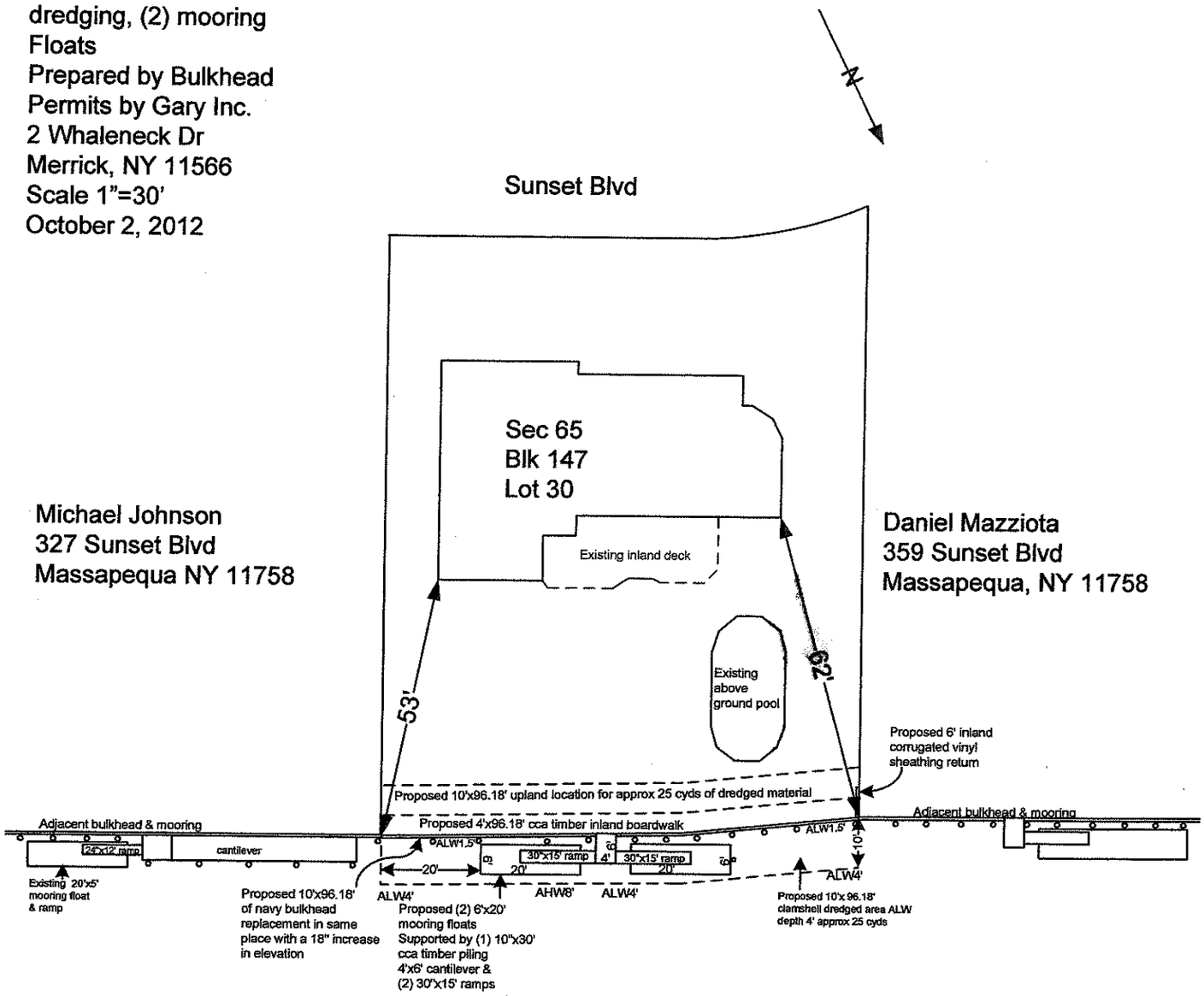

North Canal
Width 100'
Flood
Ebb

NYSDEC
APPROVED AS PER TERMS
AND CONDITIONS OF

PERMIT NO. 1-2824-02965/00001
DATE January 4, 2013 SLA

1 0 0 7 0 1 0 0

CROSS VIEW

All hardware, nails and bolts shall be hot dip galvanized, all bolt heads and nuts will be used with cut washers. All timber will be cca treated marine grade. All sheathing Shore guard corrugated vinyl marine grade

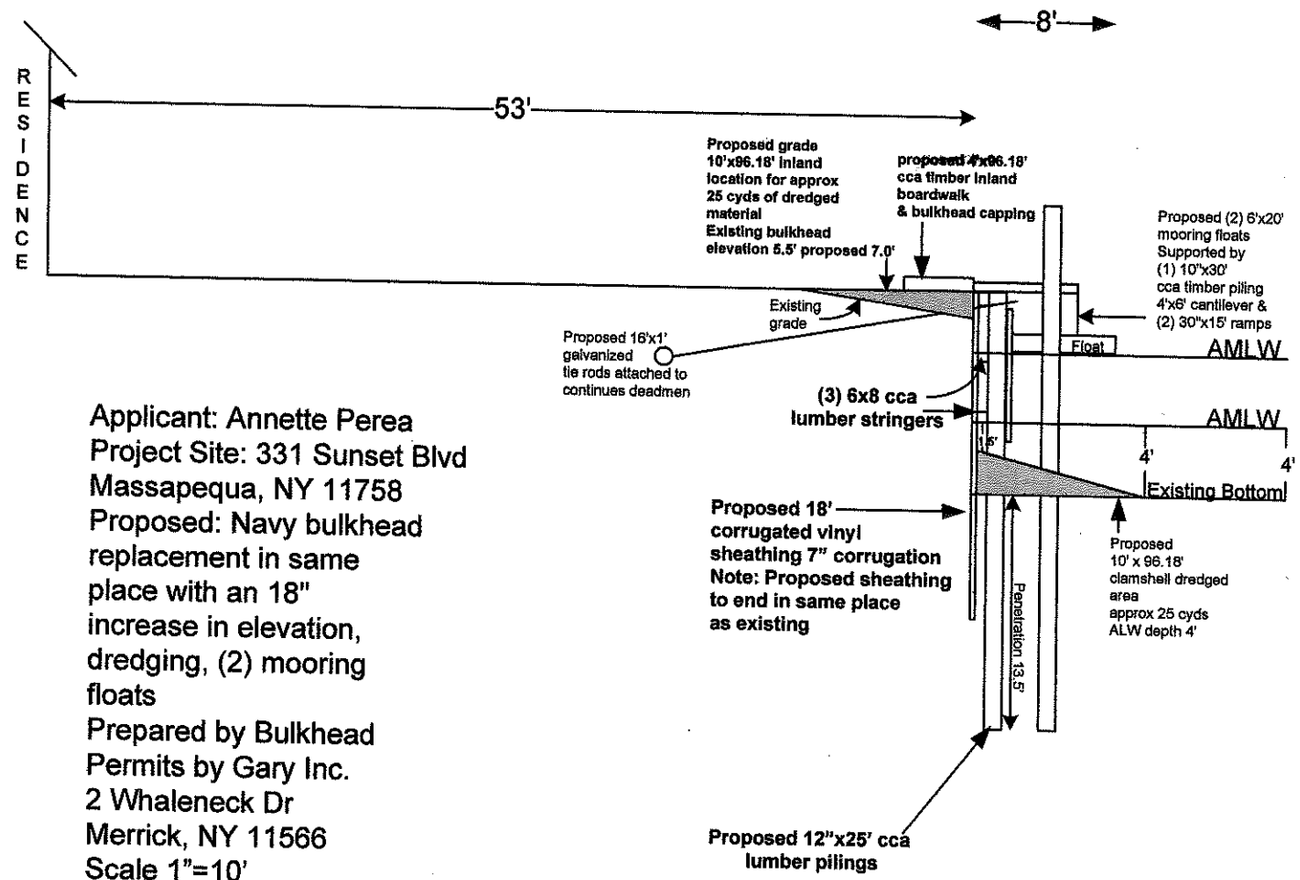

Applicant: Annette Perea
Project Site: 331 Sunset Blvd
Massapequa, NY 11758
Proposed: Navy bulkhead replacement in same place with an 18" increase in elevation, dredging, (2) mooring floats
Prepared by Bulkhead Permits by Gary Inc.
2 Whaleneck Dr
Merrick, NY 11566
Scale 1"=10'
October 2, 2012

NYSDEC
APPROVED AS PER TERMS AND CONDITIONS OF

PERMIT NO. 1-2824-02965/00001
DATE January 4, 2013
SLA

Reviewed By
Office of Town Attorney

WHEREAS, pursuant to the Code of the Town of Oyster Bay ("Code"), Chapter 241, "Waterways", Section 241-9, "Applications", Elizabeth L. Maccarone, Commissioner, Department of Planning and Development, by memorandum dated October 22, 2019, directed DONALD SIGNORELLI, Applicant, to provide an Affidavit of Mailing Notice, pursuant to Section 241-9(E)(3) of the Code, of the application to erect, maintain, alter or improve a dock, pier, float, bulkhead or similar structure at 101 West Shore Drive, Massapequa, New York 11758, known and designated as Section 66, Block 93, Lot 66, on the Nassau County Land and Tax Map; and

WHEREAS, more than 14 days have elapsed since said Affidavit of Mailing Notice was provided; and

WHEREAS, Commissioner Maccarone, by said memorandum, stated that Chapter 241 of the Code requires Town Board approval for structures projecting into the Town waterways, which the proposed structure does, and has requested a calendar date of November 19, 2019, for Town Board action, in connection with the aforementioned application; and

WHEREAS, George Baptista, Jr., Deputy Commissioner, Department of Environmental Resources, by memorandum dated October 8, 2019, advised that pursuant to the provisions of the Town of Oyster Bay Environmental Quality Review Law, the Town Environmental Quality Review Division ("Division") has reviewed the captioned site plan application and has reviewed the relevant environmental factors affected by the uses proposed in the subject application, and has determined that said application warrants a TYPE II ACTION, thus having no significant impact on the environment, in accordance with the Environmental Conservation Law of the State of New York, and the applicable regulations thereof,

NOW, THEREFORE, BE IT RESOLVED, That the Town Board does hereby determine that the aforementioned dock application will not have a significant impact on the environment, that the proposed action in said application constitutes a TYPE II ACTION, in accordance with the New York State Environmental Conservation Law and the applicable regulations thereof, and that the Town Board hereby adopts the Town of Oyster Bay Environmental Quality Review Division Report, dated October 8, 2019; and be it further

RESOLVED, That the application of DONALD SIGNORELLI, to erect, maintain, alter or improve a dock, float, pier, bulkhead or similar structure, at 101 West Shore Drive, Massapequa, New York 11758, known and designated as Section 66, Block 93, Lot 66 on the Nassau County Land and Tax Map, is hereby APPROVED.

-#-

The foregoing resolution was declared adopted after a poll of the members of the Board; the vote being recorded as follows:

Supervisor Saladino	Aye
Councilman Muscarella	Aye
Councilman Macagnone	Aye
Councilwoman Johnson	Aye
Councilman Imbroto	Aye
Councilman Hand	Aye
Councilman Labriola	Aye

21

TOWN OF OYSTER BAY
INTER-DEPARTMENTAL MEMO

TO: **MEMORANDUM DOCKET**

FROM: **ELIZABETH L. MACCARONE, COMMISSIONER**
DEPARTMENT OF PLANNING AND DEVELOPMENT

DATE: **October 22, 2019**

SUBJECT: **WATERWAYS REVIEW**
DONALD SIGNORELLI
101 WEST SHORE DRIVE
MASSAPEQUA, NY 11758
SECTION 66, BLOCK 93, LOT(S) 66
DOCK BUILDING PERMIT APPLICATION # 19030433

We have received a request from Donald Signorelli to "remove and replace in place and up to 18 inches higher 108 linear feet of existing bulkhead, install two 6 foot returns and remove and replace the existing boardwalk and decking landward of the bulkhead. Maintenance dredge to a depth of -4 feet mean low water an area no greater than 10 feet off shore of the bulkhead and use the resultant 25 cubic yards of material as backfill for the bulkhead. Install a boat lift, 3 foot by 15 foot gangway, 8 foot by 20 foot float, 6 foot by 20 foot float, and install two mooring piles." All work is to be done according to the attached plans stamped "NYSDEC Approved" Permit No. 1-2824-03320/00001 dated March 1, 2019 and the Department of the Army, New York District, Corps of Engineers Nationwide Permit No. NAN-2019-00070-EBR dated September 6, 2019. Chapter 241 of the Code of the Town of Oyster Bay entitled "Waterways" requires Town Board approval for structures projecting into the waterways.

Copies of the following documents are attached: Town of Oyster Bay Mooring, Dock, Pier, Float and Bulkhead Permit Application No.19030433; New York State Department of Environmental Conservation (NYSDEC) Permit No. 1-2824-03320/00001 dated March 1, 2019; Department of the Army, New York District Corps of Engineers Permit No. NAN-2019-00070-EBR dated September 6, 2019, and a letter of General Concurrence with the Federal Consistency Assessment Form from the New York State Department of State dated May 13, 2019. Also attached is a memo from George Baptista Jr., Deputy Commissioner Department of Environmental Resources dated October 8, 2019, classifying the project as a TYPE II ACTION under SEQRA. Please note that plans for the proposed work can be found attached to the DEC permit.

The relevant documents are attached for your review. Please note the proposed plans can be located in the NYSDEC and the Department of the Army Corps of Engineers Permit approvals.

The proposed work at the subject premises would, in our opinion, be compatible with the surrounding area.

The proposed work at the subject premises would, in our opinion, be compatible with the surrounding area.

Pursuant to Section §241-9(E)(3) in the Town Code, all persons, local governments, other agencies or corporations having any property or operating any facilities on the two properties on both sides of the premises for which the permit is sought (four properties in total), and any properties which have any frontage on a waterway and are directly opposite from the subject premises shall be notified at least 14 days in advance, in writing, of the appearance of such matter for Town Board action. It is the responsibility of the applicant to issue said notices and the applicant shall bear the cost of same. Therefore, I respectfully request that this application be put on the agenda for the November 19, 2019 Town Board calendar to provide the applicant ample time to comply with this requirement.

Elizabeth L. Maccarone

ELIZABETH L. MACCARONE
COMMISSIONER

ELM/MM
Encls.

cc: Legislative Affairs (7 copies w/ attachments)

cc: Town Attorney's Office, Attn: Dennis Sheehan

STATE OF NEW YORK
DEPARTMENT OF STATE
ONE COMMERCE PLAZA
99 WASHINGTON AVENUE
ALBANY, NY 12231-0001
WWW.DOS.NY.GOV

ANDREW M. CUOMO
GOVERNOR

ROSSANA ROSADO
SECRETARY OF STATE

May 13, 2019

Adon Austin
Rising Tide Waterfront Solutions
486 Sunrise Highway, Suite 102
Rockville Centre, NY 11570

Re: F-2018-1374
U.S. Army Corps of Engineers/New York District Permit Application: Donald Signorelli
NYS DEC Region 1: 1-2824-03320/00001, 2, 3
Reconstruct 108 lf timber bulkhead in place with vinyl sheet pile and elevated 18"; installation of head dock (20' x 8' = 160 sf); installation of floating dock (20' x 6' = 120 sf); installation of boat lift and gangway ramp; dredge 10' seaward of the bulkhead to a depth of 4' below mlw elevation to be used a s backfill for bulkhead
101 West Shore Drive Massapequa, Nassau County
Unqua River
Concurrence with Consistency Certification

Dear Adon Austin:

The Department of State has completed its review of your consistency certification regarding the consistency of the above-referenced activity with the New York Coastal Management Program.

Pursuant to 15 CFR Part 930.62, and based upon the project information submitted, the Department of State concurs with your consistency certification for this activity. This concurrence is without prejudice to and does not obviate the need to obtain all other applicable licenses, permits, or other forms of authorization or approval that may be required pursuant to existing State statutes.

Sincerely,

Gregory L. Capobianco
Office of Planning, Development and
Community Infrastructure

GLC/RF

cc: COE/ NY District – Stephan Ryba
NYSDEC/Region 1 – dep.r1@dec.ny.gov
Applicant- Donald Signorelli

NEW YORK STATE OF OPPORTUNITY. | Department of State

TOWN OF OYSTER BAY
INTER-DEPARTMENTAL MEMO

October 8, 2019

TO: JOSEPH NOCELLA, OFFICE OF THE TOWN ATTORNEY
ATTENTION: SHEILA TARNOWSKI, OFFICE OF LEGISLATIVE AFFAIRS

FROM: GEORGE BAPTISTA JR., DEPUTY COMMISSIONER,
DEPARTMENT OF ENVIRONMENTAL RESOURCES

SUBJECT: **DOCKS, PIERS & FLOATS PERMIT:**
Donald Signorelli
Application # 19030433
101 West Shore Drive, Massapequa, New York
Section: 66 Block: 93 Lot(s): 66

Pursuant to the provisions of the New York State Environmental Quality Review Act (Article 8 of the Environmental Conservation Law, SEQRA, as promulgated in the regulations contained in 6 NYCRR Part 617) and the Town of Oyster Bay Environmental Quality Review (TEQR) Law (Chapter 110 of the Oyster Bay Town Code), the Department of Environmental Resources has reviewed the above-captioned application.

Based on our review, the Department has classified the subject proposal as a **TYPE II ACTION**, under the SEQRA Type II Actions List, at §617.5(c)(12), relative to "construction, expansion or placement of minor accessory/appurtenant residential structures, including garages, carports, patios, decks, swimming pools, tennis courts, satellite dishes, fences, barns, storage sheds or other buildings not changing land use or density;" and under Appendix B, §B(2), of the TEQR Law, relative to "The installation of minor accessory facilities such as lawn sprinkler systems, swimming pool heaters and fire sprinkler systems, provided that such systems comply with all applicable codes and ordinances."

Actions or classes of actions identified in the above-referenced section of SEQRA have been pre-determined not to have a significant impact on the environmental or are otherwise precluded from environmental review under the Environmental Conservation Law, Article 8.

Inasmuch as the action which would be undertaken by the subject applicant is on SEQRA's pre-determined Type II Actions list, as described above, the Department of Environmental Resources has applied the law and finds that the subject application does not require the completion of an environmental assessment form or an environmental impact statement, or any further review under SEQRA.

GEORGE BAPTISTA JR., DEPUTY COMMISSIONER
DEPARTMENT OF ENVIRONMENTAL RESOURCES

cc: Elizabeth L. Maccarone, Commissioner, Department of Planning & Development
Attn: Michael Moriarty, Commercial Planning

SECTION 66 BLOCK 93 LOT(S) 66

10030423

TOWN OF OYSTER BAY
DEPARTMENT OF PLANNING & DEVELOPMENT
DIVISON OF BUILDING
Town Hall
Oyster Bay, New York 11771

APPLICATION FOR PERMIT TO BUILD OR INSTALL

APPLICATION MUST BE TYPEWRITTEN OR PRINTED IN INK LEGIBLY.

	Name	Street Address	Post Office	Zip	Phone #
PROPERTY OWNER:	MR. DONALD SIGNORELLI	101 WEST SHORE DRIVE	MASSAPEQUA, NY	11758	[redacted]
LESSEE TENANT:					
APPLICANT:	MR. ADON M AUSTIN, PE | RISING TIDE	486 SUNRISE HWY STE 102	ROCKVILLE CENTRE, NY	11570	(516) 595-3483
ARCHITECT:					
CONTRACTOR:	KEVEL MARINE	327 SUNSET BLVD.	MASSAPEQUA	11758	(516) 541-8819
PLUMBER:					
ELECTRICIAN:					

ADDRESS OF CONSTRUCTION: _____
IF DIFFERENT FROM ABOVE — NO. & STREET — POST OFFICE — ZIP CODE

LOCATION OF PROPERTY: N.E.S.[W.] SIDE OF WEST SHORE DRIVE 130 FEET
[N]E.S[W] OF POCAHONTAS STREET WEST (STREET) MASSAPEQUA (POST OFFICE)
OR
N.E.S.W. OF _____ corner of _____ (STREET) and _____ (STREET) _____ (POST OFFICE)

_____**CHECK HERE IF REQUESTING A WAIVER OF THE RECENT SURVEY REQUIREMENT (SEE INSTRUCTIONS FOR FURTHER INFO).**

TYPE OF BUILDING

A. TYPE OF IMPROVEMENT	EXISTING	PROPOSED	B. PROPOSED USE	EXISTING	PROPOSED
1. NEW BUILDING/STRUCTURE			1. ONE FAMILY		
2. ADDITION/EXTENSION			2. TWO FAMILY		
3. ALTERATION (i.e. Garage Conv.)			3. PARENT CHILD		
4. DECK			4. GARAGE		
5. AWNING/ROOF-OVER			5. BUSINESS		
6. CELLAR ENTRANCE			6. INDUSTRIAL		
7. REISSUE #			7. RESTAURANT		
8. OTHER	X		8. PUBLIC ASSEMBLY		
			9. OTHER		X

DESCRIBE THE WORK IN DETAIL (Size and Dimension(s) of Structure(s) (A) RECONSTRUCT 108 LF TIMBER BULKHEAD IN-PLACE WITH VINYL SHEET PILE AND ELEVATED 18 IN; (B) INSTALL HEAD DOCK (20X8 FT=160 SF); (C) INSTALL FLOATING DOCK (20X6 FT=120 SF); (D) INSTALL BOAT LIFT; (E) INSTALL GANGWAY; (F) DREDGE 10 FT SEAWARD OF THE BULKHEAD TO A DEPTH OF 4 FT BELOW THE MLW ELEVATION TO BE USED AS BACKFILL FOR BULKHEAD.

_____**CHECK HERE IF TREES ARE BEING REMOVED ON THE PROPERTY. IF SO, A *TREE PERMIT* MUST BE OBTAINED FROM THE DEPARTMENT OF PARKS. PLEASE CALL (516) 797-7956 FOR FURTHER INFORMATION.**

HAVE BOTH AFFIDAVITS NOTARIZED

THE OWNER OF THE BUILDING & THE UNDERSIGNED AGREE TO CONFORM TO ALL APPLICABLE LAWS OF THE TOWN OF OYSTER BAY, COUNTY OF NASSAU & STATE OF NEW YORK

APPLICANT

STATE OF NEW YORK
COUNTY OF NASSAU ss:

MR. ADON M AUSTIN being duly sworn, deposes and says: That he/she resides at RISING TIDE/486 SUNRISE HWY STE 102 In the hamlet of ROCKVILLE CENTRE in the State of NEW YORK and that he/she is authorized by the Owner MR. DONALD SIGNORELLI who is the owner in fee of all that certain lot, piece or parcel of land shown on the attached survey, situated, lying and being within the unincorporated area of the Town of Oyster Bay, to make application for a permit to perform said work in the foregoing application and accompanying plans, and all the statements contained herein are true to deponents own knowledge.
Address: 486 SUNRISE HIGHWAY SUITE 102
Phone: (516) 595-3483
(Sign here) _____
Sworn to before me this 19 day of March 20 19

NOTARY PUBLIC
DONALD BAILEY
Notary Public, State of New York
No 01BA6379839
Qualified in Queens County
Commission Expires August 27, 2022

OWNER

STATE OF NEW YORK
COUNTY OF NASSAU ss:

MR. DONALD SIGNORELLI being duly sworn, deposes and says: That he/she resides at 101 WEST SHORE DRIVE in the hamlet of MASSAPEQUA in the State of NEW YORK and that he/she is the owner in fee of all that certain lot, piece or parcel of land shown on the attached survey, situated, lying and being within the unincorporated area of the Town of Oyster Bay, that the work proposed to be done upon the said premises, will be done in accordance with the approved application and accompanying plans, and hereby authorizes MR. ADON M AUSTIN (applicant) to make application for a permit to perform said work in the foregoing application and accompanying plans, and all the statements herein contained are true to deponent's own knowledge.
(Sign here) _____ (owner)
Sworn to before me this 18th day of MARCH 20 19

NOTARY PUBLIC
MARYANN DIGIOVANNI
Notary Public, State of New York
01DI6224641
Qualified in Suffolk County
My Commission Expires July 6, 2022

(Rev. 03/13/2012)

WATERFRONT IMPROVEMENT

101 WEST SHORE DRIVE

MASSAPEQUA, NY 11758

12 MARCH 2019

ISSUED FOR CONSTRUCTION

LOCATION MAP

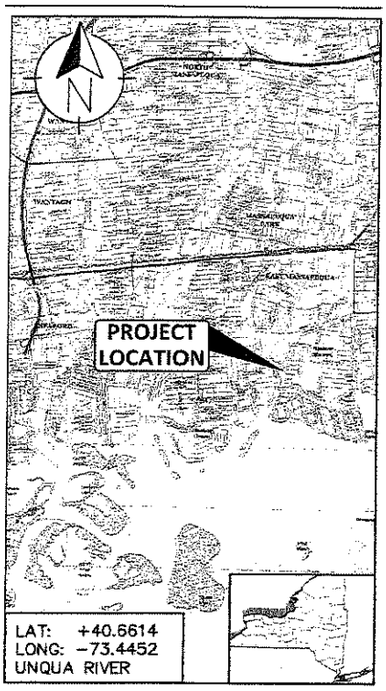

REF: AMITYVILLE QUADRANGLE NEW YORK 7.5–MINUTE SERIES

PROJECT INFORMATION

LOCATION

PRIVATE RESIDENCE OF MR. DONALD SIGNORELLI, 101 WEST SHORE DRIVE, IN THE TOWN OF OYSTER BAY, NASSAU COUNTY, NEW YORK ALONG UNQUA RIVER.

PROJECT NOTIFICATION

COMMENCEMENT NOTIFICATION TO REGULATORY AGENCY SHALL BE SUBMITTED, AS REQUIRED, BY SELECTED CONTRACTOR PRIOR TO THE START OF WORK.

GENERAL CONTACT INFORMATION

RISING TIDE WATERFRONT SOLUTIONS, PLLC
486 SUNRISE HIGHWAY, SUITE 102
ROCKVILLE CENTRE, NY 11570
PHONE: 516–595–3483
EMAIL: CONTACT@RT–WS.COM

DEFINITION(S)

AUTHORITY: MR. DONALD SIGNORELLI
ENGINEER: RISING TIDE WATERFRONT SOLUTIONS, PLLC
CONTRACTOR: KEVEL MARINE

REVISION(S)

0: ISSUED FOR CONSTRUCTION 03–12–19

SKETCH INDEX

TIDAL CHART ELEVATION(S)			
POSITION	MLW	NAVD88	DESCRIPTION
MHWS	+2.4	+1.3	MEAN HIGH WATER SPRING
MHHW	+2.3	+1.2	MEAN HIGHER HIGH WATER
MHW	+2.1	+1.0	MEAN HIGH WATER
MSL	+1.0	−0.1	MEAN SEA LEVEL
MLW	±0.0	−1.1	MEAN LOW WATER
MLLW	−0.1	−1.2	MEAN LOWER LOW WATER

PROJECT DESCRIPTION

REMOVE AND REPLACE 108 LINEAR FEET OF FUNCTIONING AND LAWFULLY EXISTING BULKHEAD, INCLUDING RETURNS AND PARALLEL CAPPING BOARDWALKS, WITHIN THE LITTORAL ZONE (DEF: 6 NYCRR PART 661) IN–PLACE (WITHOUT SEAWARD EXPANSION). THE REPLACEMENT BULKHEAD SHALL BE 18–INCHES HIGHER THAN THE EXISTING BULKHEAD. PROJECT INCLUDES MAINTENANCE DREDGING TEN (10) FT SEAWARD OF THE BULKHEAD TO A DEPTH OF 4 FT BELOW THE MEAN LOW WATER ELEVATION. PROJECT ALSO INCLUDES INSTALLATION OF A 20X8 HEAD DOCK, 20X6 FLOATING DOCK, BOAT LIFT, ACCESS GANGWAY AND MOORING PILES.

SHEET NO.	PROJECT NO.	PROJECT	SCALE	
SK-1	P181214.00	WATERFRONT IMPROVEMENT PREPARED FOR MR. DONALD SIGNORELLI LOCATED AT 101 WEST SHORE DRIVE	N/A	Rising Tide | Waterfront Solutions
	DRAWN BY: JWK		DATE: 03/12/19	486 SUNRISE HIGHWAY, SUITE 102 ROCKVILLE CENTRE, NEW YORK 11570
1 OF 10 SHEET(S)	CHECKED BY: AMA	MASSAPEQUA, NY UNQUA RIVER NASSAU COUNTY	REVISION NO. 0	SHEET: TITLE SHEET & LOCATION MAP

ISSUED FOR CONSTRUCTION

GENERAL NOTE(S)

1. THE CONTRACTOR IS SOLELY RESPONSIBLE FOR MEANS, METHODS, AND SAFETY OF WORK.
2. ALL WORK SHALL CONFORM TO ALL FEDERAL, STATE, COUNTY, OR LOCAL CODES HAVING JURISDICTION OVER THE PROJECT LOCATION.
3. ALL PROJECT WORK SHALL BE IN ACCORDANCE WITH THE CONTRACT DOCUMENTS OR AS DIRECTED BY THE AUTHORITY OR THE ENGINEER. CONTRACTOR SHALL BECOME FAMILIAR WITH THE ACTUAL SITE CONDITIONS AND SHALL BE RESPONSIBLE FOR FURNISHING A COMPLETED PROJECT AS REPRESENTED IN THE CONTRACT DOCUMENTS.
4. THE CONTRACTOR IS RESPONSIBLE FOR FIELD VERIFICATION OF EXISTING. THE CONTRACTOR SHALL PERFORM FIELD MEASUREMENTS PRIOR TO CONSTRUCTION, FABRICATION, AND/OR PURCHASE OF ANY MATERIAL. DISCOVERY OF INCONSISTENT SITE INFORMATION OR CONDITIONS SHALL BE IMMEDIATELY CONVEYED TO THE AUTHORITY AND THE ENGINEER PRIOR TO COMMENCING OR CONTINUING CONSTRUCTION. CONFLICTS ARISING DUE TO THE LACK OF COORDINATION SHALL BE THE RESPONSIBILITY AND AT THE SOLE EXPENSE OF THE CONTRACTOR.

PERMIT(S)

1. THE CONTRACTOR IS RESPONSIBLE FOR VERIFYING ALL REQUIRED REGULATORY, CONSTRUCTION AND/OR BUILDING PERMITS AND/OR CLEARANCES ARE SECURED PRIOR TO COMMENCING CONSTRUCTION.

SITE ACCESS AND STAGING AREA(S)

1. THE CONTRACTOR IS RESPONSIBLE FOR ALL SITE SECURITY AND JOB SAFETY. ALL CONSTRUCTION ACTIVITY SHALL BE IN ACCORDANCE WITH OSHA STANDARDS AND LOCAL & STATE REGULATIONS.
2. THE PROJECT AREA SHALL BE KEPT, AT ALL TIMES, FREE OF DEBRIS AND EXCESS MATERIAL TO THE SATISFACTION OF THE AUTHORITY AND THE ENGINEER.

ENVIRONMENTAL CONTROLS

1. CONTRACTOR SHALL PERFORM ALL WORK IN CONFORMANCE WITH THE CONDITIONS DEFINED WITHIN LISTED REGULATORY PERMITS.
2. CLEAN FILL ONLY – ALL FILL SHALL CONSIST OF CLEAN SAND, GRAVEL OR SOIL. ASPHALT, SLAG, FLY ASH, BROKEN CONCRETE OR DEMOLITION DEBRIS IS PROHIBITED.
3. CONTRACTOR SHALL NOT DISTURB PROTECTED BUFFER AREA OR AREAS PREVIOUSLY DESIGNATED TO REMAIN IN A NATURAL AND/OR UNDISTURBED STATE BY ANY ENVIRONMENTAL AGENCY.
4. BULKHEAD / STRUCTURE EXCAVATION – ALL BACKFILL SHALL BE EXCAVATED LANDWARD OF THE STRUCTURE AND RETAINED PRIOR TO ANY CONSTRUCTION OR REMOVAL OF THE BULKHEAD. CONTRACTOR SHALL PREVENT ALL EXCAVATED SOIL FROM ENTERING THE WATERBODY. ALL EXCAVATED MATERIAL SHALL BE RETAINED AT THE PROJECT SITE ABOVE THE REACH OF HIGH WATER OR BEHIND THE COMPLETED WALL.
5. BULKHEAD / STRUCTURE BACKFILL – BULKHEAD CONSTRUCTION SHALL BE COMPLETED PRIOR TO PLACEMENT OF FILL MATERIAL BEHIND SUCH STRUCTURE.
6. DREDGING – DREDGING ASSOCIATED WITH THE BULKHEAD REPLACEMENT SHALL NOT EXCEED 25–CUBIC YARDS AND BE LIMITED TO THE AREA 10–FEET SEAWARD OF THE BULKHEAD AND TO A DEPTH OF 4–FEET BELOW THE MEAN LOW WATER ELEVATION. ALL DREDGING SHALL BE CONDUCTED TO LEAVE A UNIFORM BOTTOM ELEVATION FREE OF MOUNDS OR HOLES.
   A. ALL DREDGING OPERATIONS SHALL BE PERFORMED WITH A CLAM SHELL OR OTHER CLOSED BUCKET EQUIPMENT. HYDRAULIC DREDGING AND THE USE OF A DRAGLINE IS PROHIBITED. SIDE CASTING (DOUBLE DIPPING) OR TEMPORARY STORAGE OF DREDGED MATERIAL IS PROHIBITED.
   B. ALL DREDGED MATERIAL SHALL BE RETAINED ON THE PROJECT SITE ABOVE THE REACH OF HIGH WATER OR BEHIND THE COMPLETED WALL TO PREVENT RE–ENTRY INTO THE WATERBODY. OFF–SITE, UPLAND DISPOSAL OF DREDGED MATERIAL IS PROHIBITED.

MATERIAL(S)

1. MATERIALS THAT ARE STORED ON SITE SHALL BE STORED IN ACCORDANCE WITH MANUFACTURER RECOMMENDATIONS AND LOCATED IN AN AREA THAT IS PROTECTED TO PREVENT ACCIDENTS, DAMAGE, AND ANY ADVERSE ENVIRONMENTAL EFFECTS. DAMAGED MATERIALS SHALL BE PROMPTLY REPORTED TO THE AUTHORITY AND THE ENGINEER. DAMAGED MATERIALS SHALL BE REMEDIED BY THE CONTRACTOR AT THE CONTRACTORS SOLE EXPENSE AND IN ACCORDANCE WITH MANUFACTURERS RECOMMENDATIONS.
2. TIMBER: TIMBER EXPOSED TO SEAWATER, SALTWATER SPRAY OR IN CONTACT WITH THE GROUND SHALL RECEIVE CCA TREATMENT IN ACCORDANCE WITH THE LATEST AWPA STANDARDS, COMMODITY SPECIFICATION A.P. 3.0.
   A. PILES: PILES SHALL BE CLASS B SOUTHERN YELLOW PINE SUITABLE FOR A DESIGN STRESS OF 1200–PSI IN ACCORDANCE WITH ASTM D2899–70 T. PILES SHALL BE CCA TREATED PER AWPA–P5 AT A RETENTION RATE OF 2.5–PCF. MAXIMUM ALLOWABLE HORIZONTAL INSTALLATION DEVIATIONS SHALL BE 3–INCH AND VERTICAL INSTALLATION DEVIATION SHALL BE 1–INCH IN 10–FEET.
   B. FRAMING AND POSTS – FRAMING AND POSTS SHALL BE CLASSIFIED AS USE CATEGORY UC4B AND RECEIVE A MINIMUM TREATMENT CONSISTING OF 0.6–PCF OF CCA.
   C. DECKING AND RAILS – TIMBER FOR DECKING OR RAILS SHALL BE CLASSIFIED AS USE CATEGORY UC4B AND RECEIVE TREATMENT CONSISTING OF 0.6–PCF OF ACQ–B.
3. VINYL SHEET PILES – SHEET PILES SHALL BE FABRICATED BY A MANUFACTURER APPROVED, IN WRITING, BY THE AUTHORITY OR ENGINEER, A PROVIDE A MINIMUM MODULUS OF ELASTICITY OF 380–KSI.
   A. SHEET PILING SHALL BE DRIVEN TO DEPTH AS SHOWN IN THE CONTRACT DOCUMENTS. SHEETS DRIVEN TO A DEPTH, LESS THAN SPECIFIED MUST BE REPORTED TO THE ENGINEER, IN WRITING.
   B. SHEET PILING SHALL BE DRIVEN WITHIN 1–INCH PER 5–FEET IN THE PLANE OF THE SHEET AND 3/8–INCH PER 1–FOOT PERPENDICULAR TO THE PLANE OF THE SHEET.
4. FASTENING HARDWARE – STEEL FOR TIMBER CONNECTIONS SHALL BE HOT DIPPED GALVANIZED (HDG.), WITH COATING WEIGHT NOT LESS THAN 2–OUNCES PER 1–SQUARE FOOT, AFTER FABRICATION.
5. FILL MATERIALS – MATERIAL CONSISTING OF ROCK, STONE, SLAG, COBBLES, OR GRAVEL FREE OF SHALE OR OTHER SOFT, POOR DURABILITY PARTICLES AND UNSUITABLE MATERIALS. UNSUITABLE FILL SHALL COMPRISE ANY MATERIAL SO DESIGNATED BY THE ENGINEER BECAUSE OF ITS TYPE, INABILITY TO BE PROPERLY COMPACTED, OR LEVEL OF CONTAMINATION.

ABBREVIATIONS	
CL	CENTER LINE
ø	DIAMETER
EL.	ELEVATION
EMBED.	EMBEDMENT
EXIST.	EXISTING
FND	FOUNDATION
HDG.	HOT DIPPED GALVANIZED
MHHW	MEAN HIGHER HIGH WATER
MHWS	MEAN HIGH WATER SPRING
MIN.	MINIMUM
MLLW	MEAN LOWER LOW WATER
MLW	MEAN LOW WATER
MSL	MEAN SEA LEVEL
N/A	NOT APPLICABLE
N.T.S.	NOT TO SCALE
PL	PLATE
PLA.	PLACE(S)
T/	TOP OF
TREAT.	TREATMENT
TYP.	TYPICAL

STATE OF NEW YORK
JOHN M. AUSTIN
085255
LICENSED PROFESSIONAL ENGINEER

SHEET NO.	PROJECT NO.	PROJECT	SCALE	
SK-2	P181214.00	WATERFRONT IMPROVEMENT PREPARED FOR MR. DONALD SIGNORELLI LOCATED AT 101 WEST SHORE DRIVE	N/A	Rising Tide | Waterfront Solutions
2 OF 10 SHEET(S)	DRAWN BY JWK		DATE 03/12/19	486 SUNRISE HIGHWAY, SUITE 102 ROCKVILLE CENTRE, NEW YORK 11570
	CHECKED BY AMA	MASSAPEQUA, NY UNQUA RIVER NASSAU COUNTY	REVISION NO. 0	SHEET GENERAL NOTES

1903043

ITEM	STATE	ACTION	SIZE
1. BULKHEAD	EXISTING	REMOVE & REPLACE	108 LF
2. FLOATING DOCK	PROPOSED	CONSTRUCT/INSTALL	20X6-FT=120 SF
3. FLOATING HEAD DOCK	PROPOSED	CONSTRUCT/INSTALL	20X8-FT=160 SF
4. SMALL CRAFT 4-PILE LIFT	PROPOSED	CONSTRUCT/INSTALL	22,000LBS
5. (2) MOORING PILE(S)	PROPOSED	CONSTRUCT/INSTALL	12"ø

TOTAL NUMBER OF PILES=30

STATE OF NEW YORK
ADOM M. AUSTIN
085255
LICENSED PROFESSIONAL ENGINEER

ISSUED FOR CONSTRUCTION

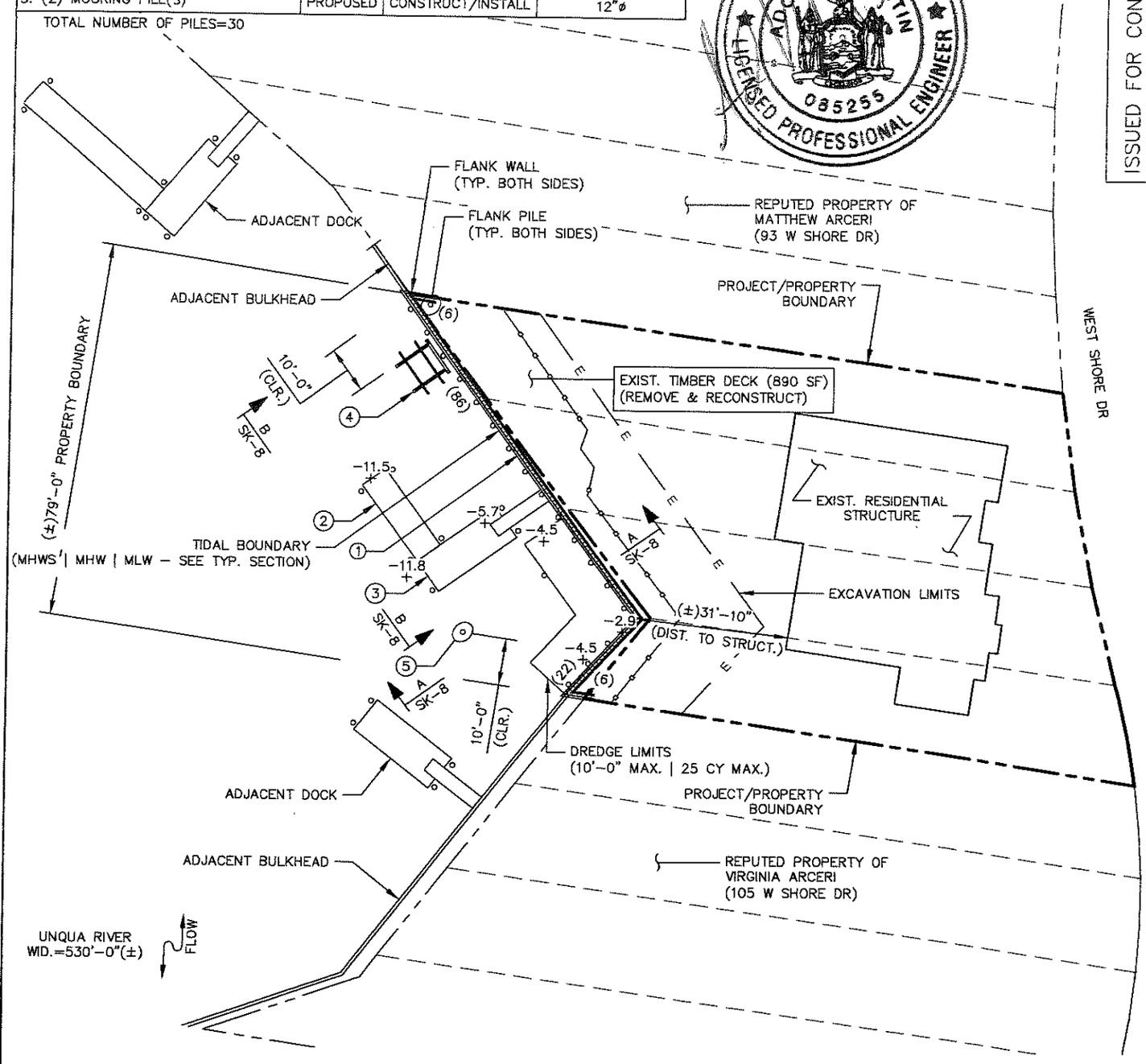

LEGEND:
(XX) BULKHEAD SEGMENT LENGTH
-X.X: DEPTH RELATED TO MLW

FACILITY PLAN

SCALE: 1"=30'-0"

SHEET NO.	PROJECT NO.	PROJECT	SCALE	
SK-3	P181214.00	WATERFRONT IMPROVEMENT PREPARED FOR MR. DONALD SIGNORELLI LOCATED AT 101 WEST SHORE DRIVE	1"=30'-0"	Rising Tide | Waterfront Solutions
	DRAWN BY JWK		DATE 03/12/19	486 SUNRISE HIGHWAY, SUITE 102 ROCKVILLE CENTRE, NEW YORK 11570
3 OF 10 SHEET(S)	CHECKED BY AMA	MASSAPEQUA, NY UNQUA RIVER NASSAU COUNTY	REVISION NO. 0	SHEET FACILITY PLAN

1093043

NOTE(S):
1. FILL: ALL FILL WILL BE CLEAN FREE DRAINING FREE OF CONTAMINANTS AND REGULATED WASTES INCLUDING CONSTRUCTION DEBRIS THAT IS SOURCED FROM NYS DEC APPROVED SITE.
2. BULKHEAD ELEVATION: T/PROPOSED BULKHEAD TO BE RAISED 18 INCHES HIGHER THAN EXISTING T/BULKHEAD ELEVATION.
3. DREDGE AREA LIMITED TO BOUNDARY SHOWN ON SK-3.

TIMBER TREATMENT

TREATMENT TYPE	ELEMENT	RETENTION	DESCRIPTION
1A	PILES	1.5	CCA TREATED PER LATEST AWPA STANDARDS, COMMODITY SPECIFICATION A.P 3.0
1B		2.5	
2A	FRAMING	1.5	CCA TREATED PER LATEST AWPA STANDARDS, COMMODITY SPECIFICATION A.P 3.0
2B		2.5	
3A		1.5	ACQ TREATED PER AWPA ACQ-D
3B		2.5	

ISSUED FOR CONSTRUCTION

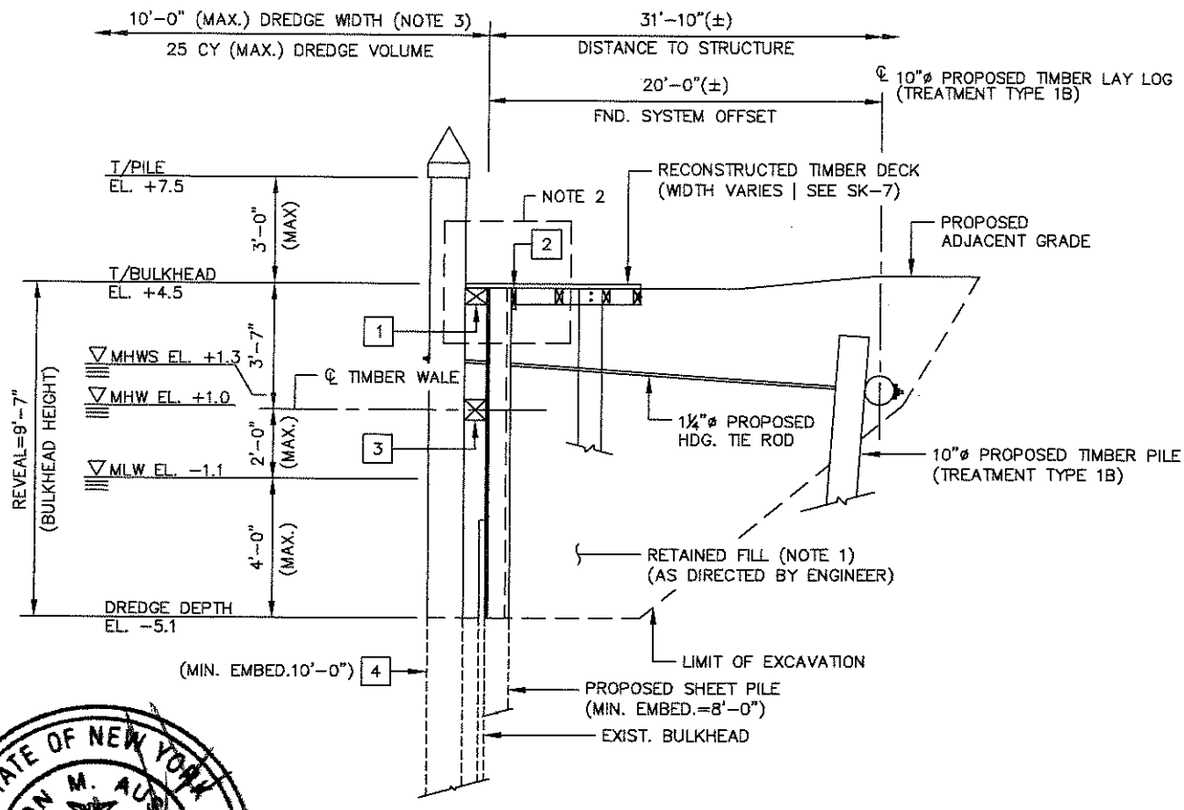

TYP SECTION
SCALE: 1"=5'-0"

NOTE: GANGWAY AND FLOATING DOCK NOT SHOWN FOR CLARITY. SEE SK-8 FOR ADDITIONAL INFORMATION.

STATE OF NEW YORK
ADON M. AUSTIN
085255
LICENSED PROFESSIONAL ENGINEER

ITEM	MEMBER	SIZE	TREATMENT TYPE
1	UPPER WALE	6x8	2A
2	BACK STRAP	2x8	2A
3	LOWER WALE	8x8	2B
4	TIMBER PILE	12"Ø	2B

ALL ELEVATIONS IN NAVD 88

SHEET NO.	PROJECT NO.	PROJECT	SCALE	
SK-4	P181214.00	WATERFRONT IMPROVEMENT	1"=5'-0"	Rising Tide | Waterfront Solutions
	DRAWN BY JWK	PREPARED FOR MR. DONALD SIGNORELLI	DATE 03/12/19	486 SUNRISE HIGHWAY, SUITE 102 ROCKVILLE CENTRE, NEW YORK 11570
4 OF 10 SHEET(S)	CHECKED BY AMA	LOCATED AT 101 WEST SHORE DRIVE	REVISION NO. 0	SHEET BULKHEAD SECTION & DETAILS
		MASSAPEQUA, NY UNQUA RIVER NASSAU COUNTY		

ISSUED FOR CONSTRUCTION

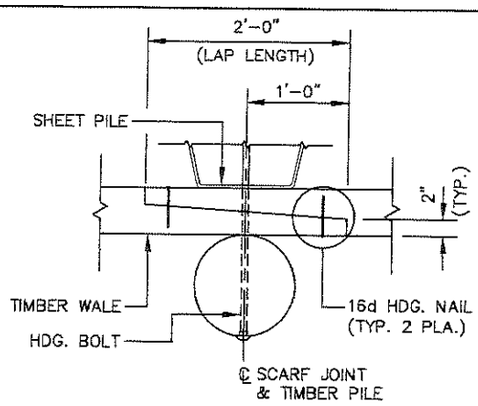

PLAN

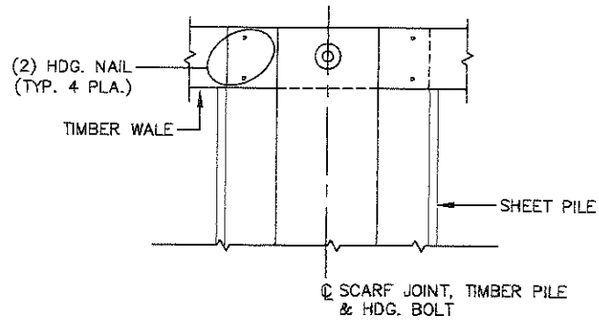

ELEVATION

TYP **DETAIL**
SCARF JOINT NOTE: TOP WALE AS SHOWN / LOWER WALE(S) SIM. N.T.S.

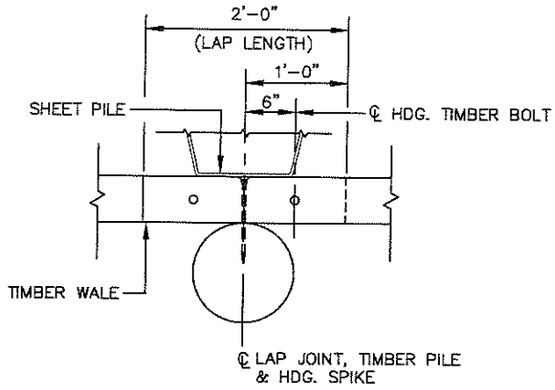

PLAN

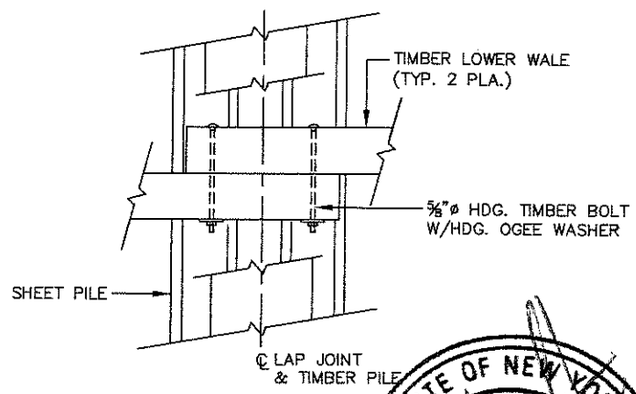

ELEVATION

TYP **DETAIL**
LAP JOINT N.T.S.

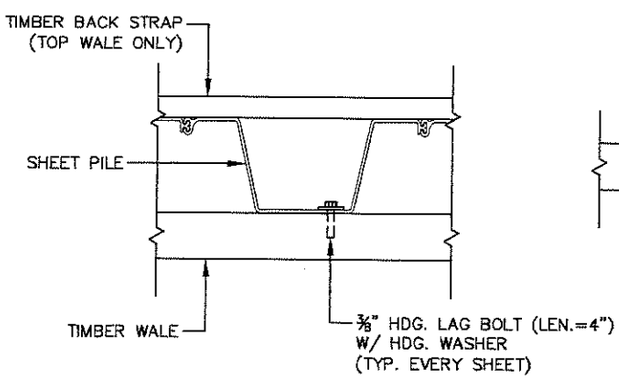

SHEET PILE TO WALE

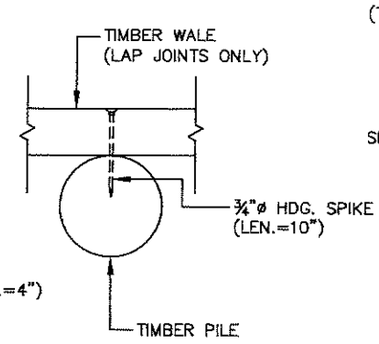

LOWER WALE TO PILE

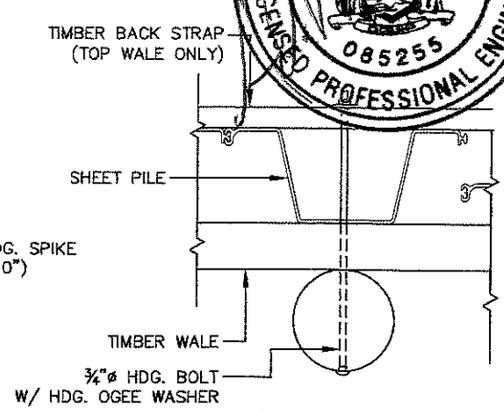

UPPER WALE TO PILE

TYP **DETAIL**
MISCELLANEOUS CONNECTION(S) N.T.S.

NOTE: CONTRACTOR MAY USE SCARF JOINT(S) IN LIEU OF LAP JOINT(S) AT LOWER WALES. PROVIDE SIMILAR CONNECTION AS UPPER WALE TO PILE.

STATE OF NEW YORK
ADON M. AUSTIN
085255
LICENSED PROFESSIONAL ENGINEER

SHEET NO.	PROJECT NO.	PROJECT	SCALE	
SK-5	P181214.00	WATERFRONT IMPROVEMENT PREPARED FOR MR. DONALD SIGNORELLI LOCATED AT 101 WEST SHORE DRIVE	N.T.S.	Rising Tide | Waterfront Solutions
5 OF 10 SHEET(S)	DRAWN BY JMK		DATE 03/12/19	486 SUNRISE HIGHWAY, SUITE 102 ROCKVILLE CENTRE, NEW YORK 11570
	CHECKED BY AMA	MASSAPEQUA, NY UNQUA RIVER NASSAU COUNTY	REVISION NO. 0	SHEET BULKHEAD CONNECTION DETAILS

ISSUED FOR CONSTRUCTION

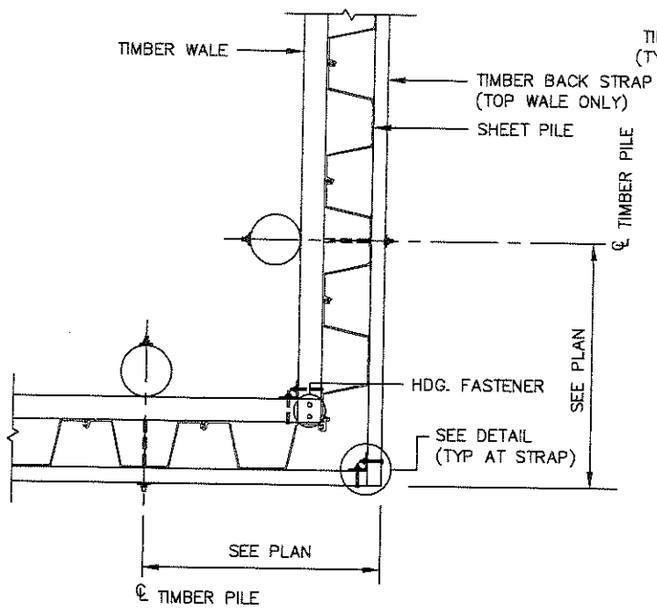

PLAN

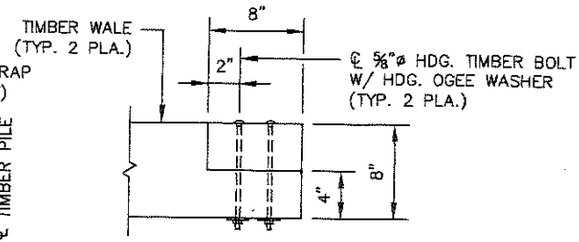

SECTION

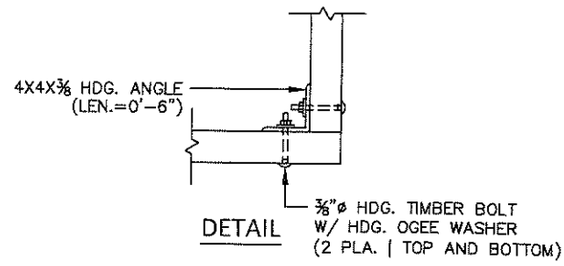

DETAIL

TYP DETAIL
CORNER JOINT(S)

N.T.S.

STATE OF NEW YORK
ADAM M. AUSTIN
085255
LICENSED PROFESSIONAL ENGINEER

SHEET NO.	PROJECT NO.	PROJECT	SCALE	
SK-6	P181214.00	WATERFRONT IMPROVEMENT PREPARED FOR MR. DONALD SIGNORELLI LOCATED AT 101 WEST SHORE DRIVE	N.T.S.	Rising Tide | Waterfront Solutions
6 OF 10 SHEET(S)	DRAWN BY JWK		DATE 03/12/19	486 SUNRISE HIGHWAY, SUITE 102 ROCKVILLE CENTRE, NEW YORK 11570
	CHECKED BY AMA	MASSAPEQUA, NY UNQUA RIVER NASSAU COUNTY	REVISION NO. 0	SHEET BULKHEAD CORNER DETAILS

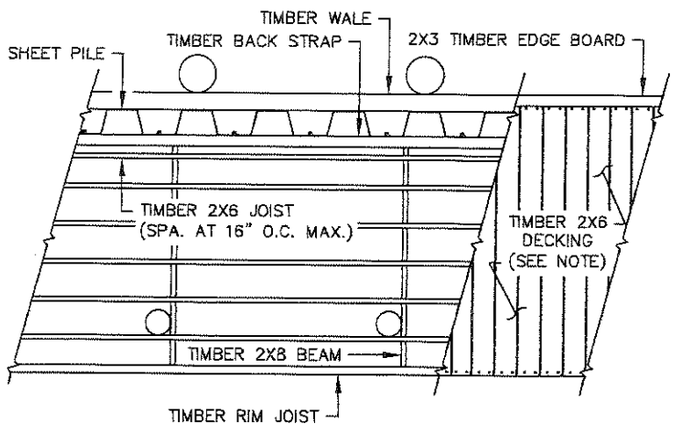

TYP DETAIL
TIMBER WALKWAY FRAMING
SCALE: 1"=3'-6"

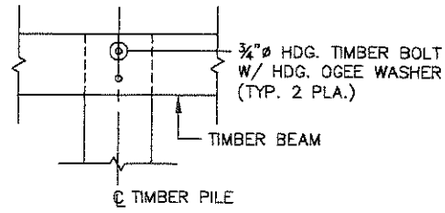

TYP DETAIL
PILE CONNECTION
SCALE: 1"=3'-6"

ISSUED FOR CONSTRUCTION

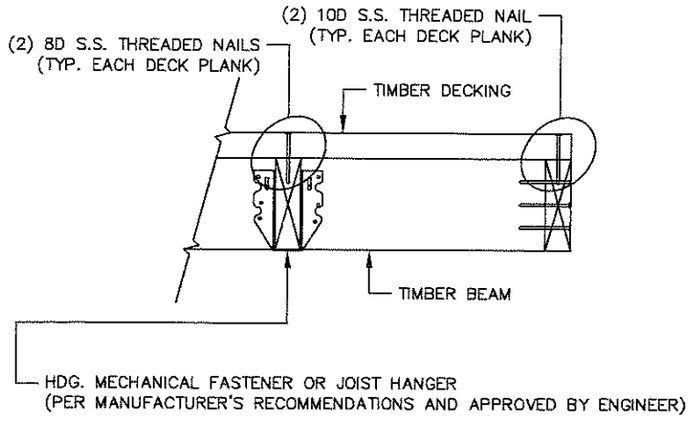

NOTE: 3-IN EQUIVALENT 10D S.S. SCREWS CAN BE USED IN LIEU OF THREADED NAILS FOR ALL CONNECTIONS.

TYP DETAIL
TIMBER WALKWAY CONNECTION(S)
SCALE: 1"=3'-6"

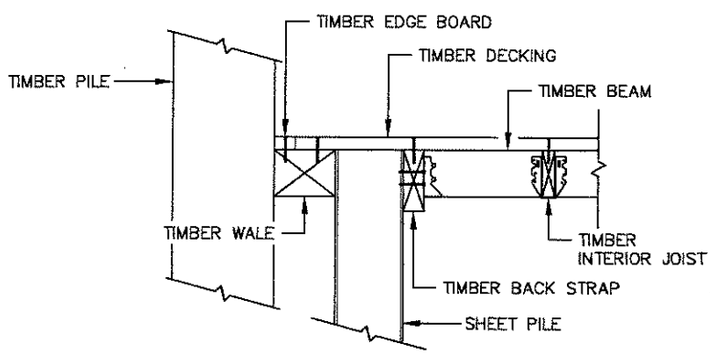

STANDARD NAVY BULKHEAD

TYP DETAIL
TIMBER WALKWAY CONNECTION(S)
SCALE: 1"=3'-6"

SHEET NO. SK-7	PROJECT NO. P181214.00	PROJECT WATERFRONT IMPROVEMENT PREPARED FOR MR. DONALD SIGNORELLI LOCATED AT 101 WEST SHORE DRIVE	SCALE 1"=3'-6"	Rising Tide | Waterfront Solutions
	DRAWN BY JWK		DATE 03/12/19	486 SUNRISE HIGHWAY, SUITE 102 ROCKVILLE CENTRE, NEW YORK 11570
7 OF 10 SHEET(S)	CHECKED BY AMA	MASSAPEQUA, NY UNQUA RIVER NASSAU COUNTY	REVISION NO. 0	SHEET TIMBER DECK DETAILS

ISSUED FOR CONSTRUCTION

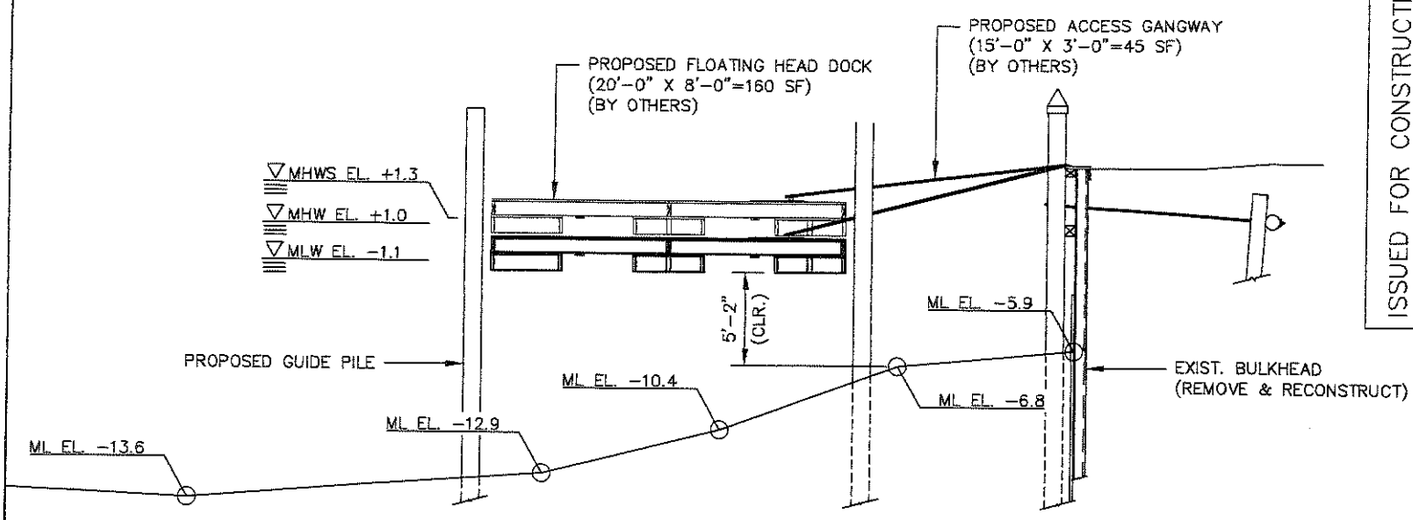

A / SK-3 **ELEVATION**
FLOATING DOCK SCALE: 1"=10'-0"

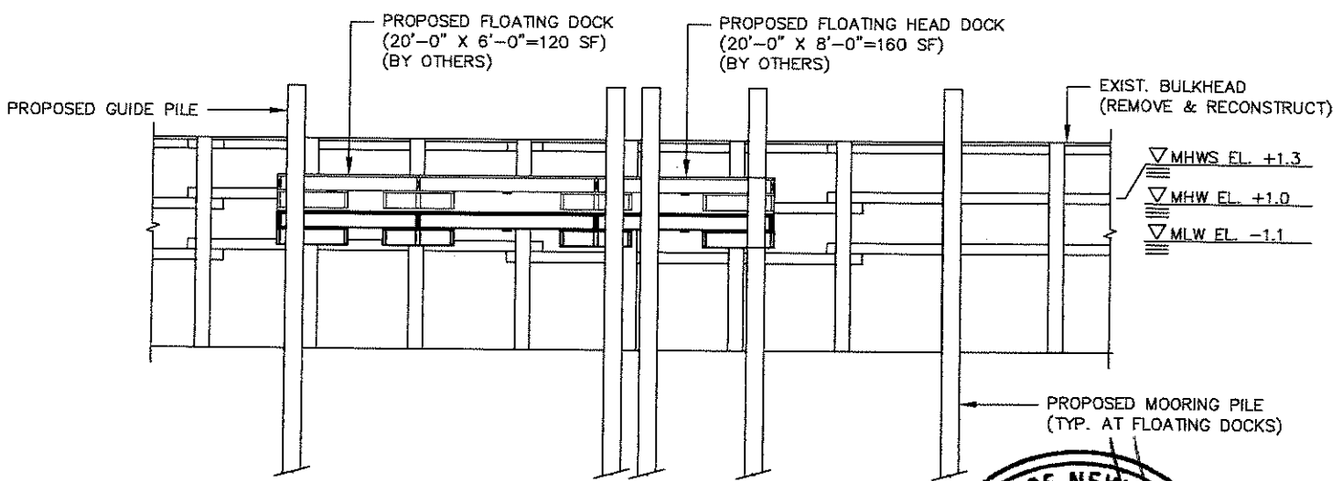

B / SK-3 **ELEVATION**
FLOATING DOCK SCALE: 1"=10'-0"

STATE OF NEW YORK · AARON M. AUSTIN · 085255 · LICENSED PROFESSIONAL ENGINEER

NOTE: CONTRACTOR TO PROVIDE SIGNED & SEALED DRAWINGS OF FLOATING DOCK WITH SPECIFICATIONS TO ENGINEER FORE REVIEW AND APPROVAL PRIOR TO INSTALLATION.

ALL ELEVATIONS IN NAVD 88

SHEET NO. SK-8 — 8 OF 10 SHEET(S)	PROJECT NO. P181214.00	PROJECT: WATERFRONT IMPROVEMENT — PREPARED FOR MR. DONALD SIGNORELLI — LOCATED AT 101 WEST SHORE DRIVE — MASSAPEQUA, NY — UNQUA RIVER — NASSAU COUNTY	SCALE 1"=10'-0"	Rising Tide | Waterfront Solutions
	DRAWN BY JMK		DATE 03/12/19	486 SUNRISE HIGHWAY, SUITE 102 ROCKVILLE CENTRE, NEW YORK 11570
	CHECKED BY AMA		REVISION NO. 0	SHEET FLOATING DOCK

1 9 0 3 0 4 3 3

ISSUED FOR CONSTRUCTION

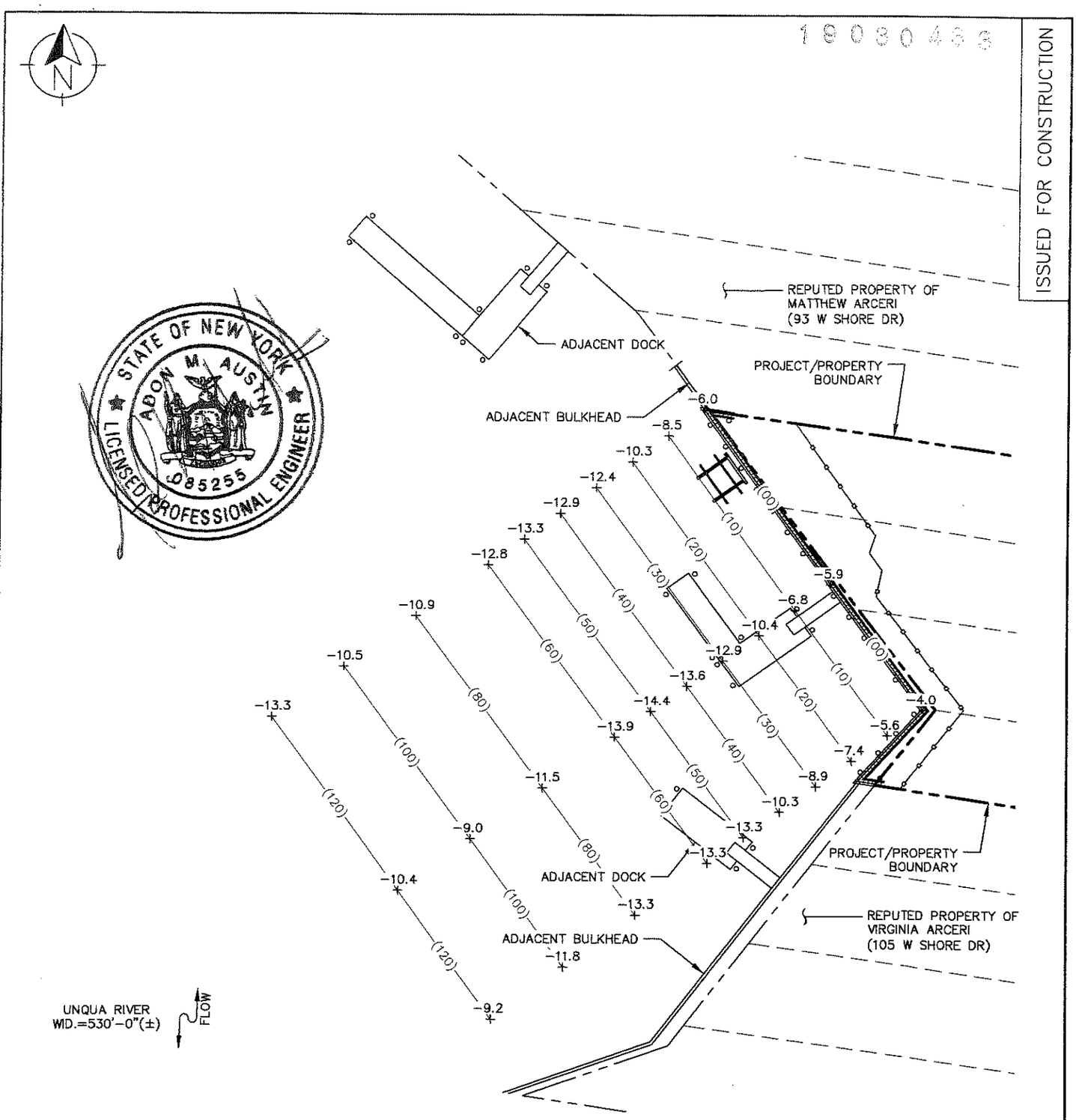

LEGEND:
-X.X: LAND UNDERWATER ELEVATION (NAVD 88)
-(XX)-: HORIZONTAL OFFSET FROM BULKHEAD FACE

HYDROGRAPHIC STUDY

LANDS UNDERWATER (DATUM: NAVD88 ELEVATION)

SCALE: 1"=30'-0"

SHEET NO.	PROJECT NO.	PROJECT	SCALE	Rising Tide | Waterfront Solutions
SK-9	P181214.00	WATERFRONT IMPROVEMENT PREPARED FOR MR. DONALD SIGNORELLI LOCATED AT 101 WEST SHORE DRIVE	1"=30'-0"	486 SUNRISE HIGHWAY, SUITE 102 ROCKVILLE CENTRE, NEW YORK 11570
9 OF 10 SHEET(S)	DRAWN BY: JWK		DATE: 03/12/19	
	CHECKED BY: AMA	MASSAPEQUA, NY UNQUA RIVER NASSAU COUNTY	REVISION NO.: 0	SHEET: LANDS UNDERWATER - NAVD88

1 9 0 3 0 4 3 3

ISSUED FOR CONSTRUCTION

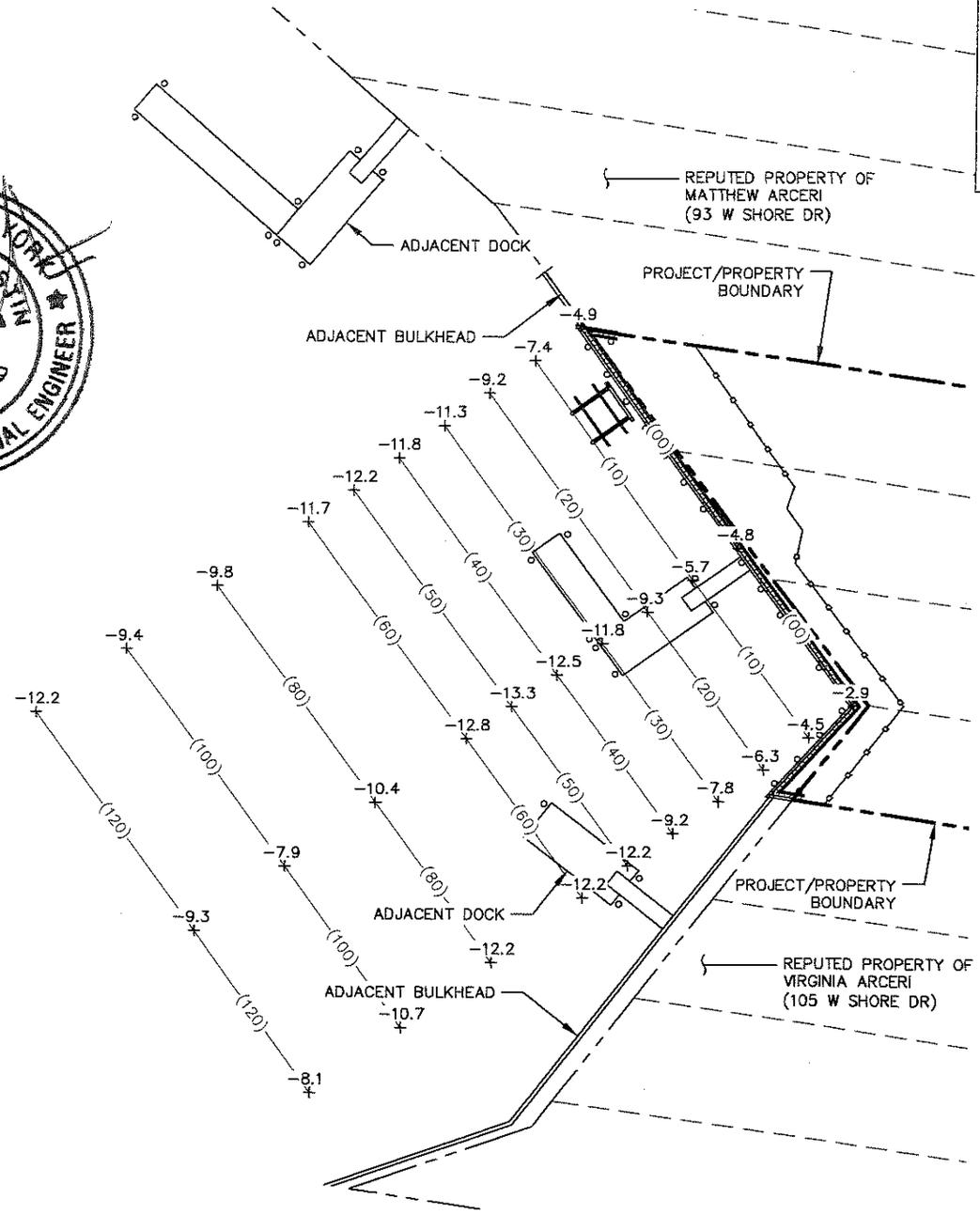

NOTE: LANDS UNDERWATER ELEVATION (DATUM: MLW ELEVATION) IS EQUIVALENT TO WATER DEPTH AT/ABOUT LOW TIDE.

LEGEND:
-X.X: LAND UNDERWATER ELEVATION (MLW)
-(XX)-: HORIZONTAL OFFSET FROM BULKHEAD FACE

HYDROGRAPHIC STUDY

LANDS UNDERWATER (DATUM: MLW ELEVATION)

SCALE: 1"=30'-0"

SHEET NO.	PROJECT NO.	PROJECT	SCALE	Rising Tide | Waterfront Solutions
SK-10	P181214.00	WATERFRONT IMPROVEMENT PREPARED FOR MR. DONALD SIGNORELLI LOCATED AT 101 WEST SHORE DRIVE	1"=30'-0"	486 SUNRISE HIGHWAY, SUITE 102 ROCKVILLE CENTRE, NEW YORK 11570
10 OF 10 SHEET(S)	DRAWN BY: JWK		DATE: 03/12/19	
	CHECKED BY: AMA	MASSAPEQUA, NY UNQUA RIVER NASSAU COUNTY	REVISION NO. 0	SHEET: LANDS UNDERWATER - MLW

IMM Quality Boat Lifts

SUPERLIFT BOAT LIFT SPECIFICATIONS
4 POST BOAT LIFTS WITH 2 CRADLE BEAMS AND 4 CABLES

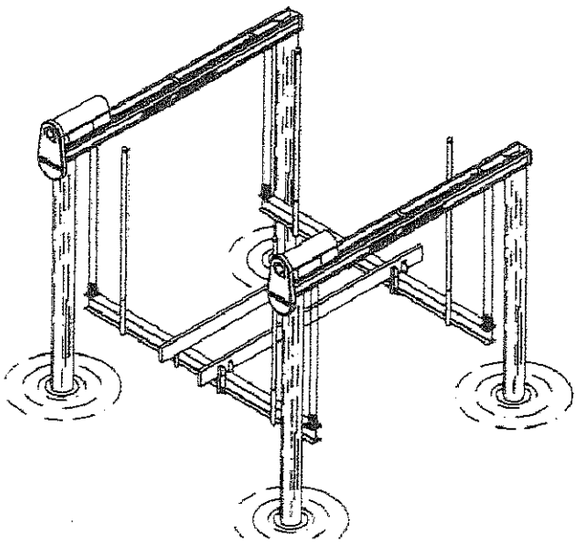

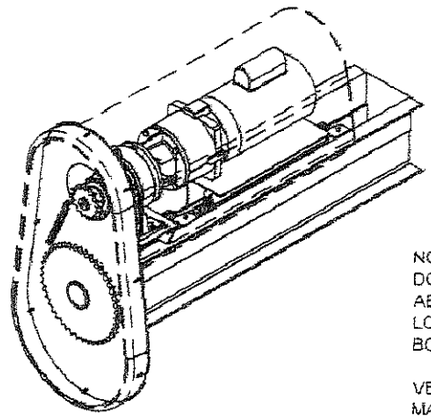

IMM BOAT LIFTS, INC. IS NOT RESPONSIBLE FOR THE DOCK STRUCTURE, OR ITS ABILITY RESIST THE APPLIED LOADS OF THE SUPERLIFT BOAT LIFT.

THE SITE SHOULD BE VERIFIED BY A LICENSED MARINE CONTRACTOR.

APPLIED LOADS WILL BE PROVIDED UPON REQUEST.

LIFT CAPACITY	CABLE BEAM SIZE CUSTOM CHANNEL INCHES	GROOVED CABLE WINDER SIZE INCHES	DRIVE SHAFT SIZE INCHES	DRIVE SHAFT SPROCKET	CHAIN SIZE	GEAR DRIVE SPROCKET	GEAR DRIVE RATIO	NO. OF MOTORS 1-1/2	MOTOR BRAKE TORQUE	NO. OF CABLES AND SIZE INCHES	CABLE SPREAD INCHES	INCHES OF LIFT PER MINUTE	GUIDE POST HEIGHT	BOAT BUNKS ALUM. INCHES	CRADLE BEAM SIZE T-BM - INCHES
5,000	5 x 220 H 2 x 160 W	3.5 DIA 14' LG LIFTS 22 FT	2 STS TUBE	40 TOOTH	#60	12 TOOTH	3/1	(2) 1 H.P. 240V/17A	5 FT-LBS	5/16 SS/AC 7x19 304 2P 28'	107	[illegible]	7	144	5 x 190 H 4 x 290 W 1,85 L
7,000	6 x 220 H 2 x 160 W	3.5 DIA 14' LG LIFTS 22 FT	2 STS TUBE	40 TOOTH	#60	12 TOOTH	3/1	2 x 1 H.P. 240V/17A	5 FT-LBS	5/16 SS/AC 7x19 304 2P 28'	112	90	7	144	5 x 190 H 4 x 290 W 1,85 L
10,000	7 x 230 H 2 x 160 W	3.5 DIA 19' LG LIFTS 27 FT	2 STS TUBE	40 TOOTH	#60	12 TOOTH	3/1	(2) 1 H.P. 240V/17A	5 FT-LBS	5/16 SS/AC 7x19 304 2P 36'	111	57	7	144	5 x 230 H 5 x 350 W 1,85 L
14,000	8 x 230 H 2 x 160 W	3.5 DIA 19' LG LIFTS 27 FT	2 STS TUBE	40 TOOTH	#60	12 TOOTH	3/1	(2) 1 H.P. 240V/17A	5 FT-LBS	5/16 SS/AC 7x19 304 2P 36'	111	44	7	144	5 x 350 H 5 x 410 W 1,85 L
18,000	11 x 230 H 2 x 160 W	3.5 DIA 19' LG LIFTS 16 FT	2 STS TUBE	40 TOOTH	#60	12 TOOTH	3/1	(2) 1-1/2 H.P. 240V/22A	5 FT-LBS	3/8 SS/AC 6x36 304 2P 50'	135	38	10	192	10 x 250 H 6 x 410 W 1,85 L
22,000	12 x 266 H 2 x 172 W	3.5 DIA 19' LG LIFTS 16 FT	2 STS TUBE	40 TOOTH	#60	12 TOOTH	3/1	(2) 1-1/2 H.P. 240V/22A	5 FT-LBS	3/8 SS/AC 6x36 304 2P 50'	135	38	10	192	12 x 280 H 7 x 470 W 1,92 L
27,000	14 x 313 H 2 x 313 W	3.5 DIA 29' LG LIFTS 19 FT	2 STS TUBE	40 TOOTH	#60	12 TOOTH	3/1	(2) 1-1/2 H.P. 240V/22A	5 FT-LBS	3/8 SS/AC 6x36 304 2P 75'	142	30	10	192	12 x 280 H 7 x 470 W 1,92 L
33,000	14 x 313 H 2 x 313 W	3.5 DIA 29' LG LIFTS 19 FT	2 STS TUBE	40 TOOTH	#60	12 TOOTH	3/1	(2) 1-1/2 H.P. 240V/22A	5 FT-LBS	3/8 SS/AC 6x36 304 2P 75'	166	25	10	240	12 x 370 H 7 x 620 W 2,12 L

HI-SPEED OPTION

GEAR DRIVE RATIO	NO. OF MOTORS 1-1/2	MOTOR BRAKE TORQUE	INCHES OF LIFT PER MINUTE
13/1	(2) 1 H.P. 240V/25A	9 FT-LBS	207
23/1	(2) 1 H.P. 240V/25A	9 FT-LBS	182
33/1	(2) 1 H.P. 240V/25A	9 FT-LBS	115
43/1	(2) 1 H.P. 240V/25A	9 FT-LBS	89
53/1	(2) 1 H.P. 240V/25A	9 FT-LBS	70
63/1	(2) 1 H.P. 240V/25A	9 FT-LBS	57
73/1	(2) 1 H.P. 240V/25A	9 FT-LBS	50
83/1	(2) 1 H.P. 240V/25A	9 FT-LBS	41

ALL SPACING TO CENTER OF PILING

LIFT CAPACITY	A	B	C	RECOMMENDED PILING SIZES
5,000 LB	132"	120"	178.375"	8" DIA.
7,000 LB	144"	144"	203.625"	8" DIA.
10,000 LB	144"	150"	208"	8" DIA.
14,000 LB	144"	150"	208"	8" DIA.
18,000 LB	168"	168"	237.50"	10" DIA.
22,000 LB	168"	192"	255.125"	10" DIA.
27,000 LB	192"	192"	271.50"	10" DIA.
33,000 LB	216"	216"	305.50"	10" DIA.

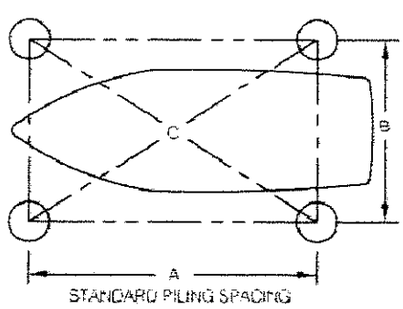

STANDARD PILING SPACING

STRUCTURAL ENGINEERING REVIEW

THIS CONSTRUCTION HAS BEEN DESIGNED AS A MAIN WIND FORCE RESISTING SYSTEM, WITH CALCULATED GRAVITY AND WIND LOADS IN COMPLIANCE WITH THE FLORIDA BUILDING CODE 2014, SECTIONS 16 & 20, ADM 2010, ASCE/SEI 7-10, AND "MINIMUM DESIGN LOADS FOR BUILDINGS AND OTHER STRUCTURES" TO WITHSTAND THE WIND LOADS ASSOCIATED WITH AN ULTIMATE WIND SPEED OF 160 MPH, EXPOSURE "D", RISK CATEGORY "I". ARNOLD/SANDERS CONSULTING ENGINEERS HAS NO CONTROL OF THE MANUFACTURING, PERFORMANCE, OR INSTALLATION OF THIS PRODUCT. THESE GENERIC PLANS WERE ENGINEERED IN ACCORDANCE WITH ACCEPTED ENGINEERING PRACTICES AND DATA PROVIDED BY THE MANUFACTURER.

3-9-16

Arnold/Sanders Consulting Engineers, Inc.
Certificate of Authorization 8451
12051 McGregor Blvd. Suite 108
Ft. Myers, FL 33919
239-267-3666

J.L. Sanders
Reg. Florida No. 66361
Date

SIGNATURE NOT VALID WITHOUT RAISED SEAL

IMM QUALITY
- BOAT LIFTS -

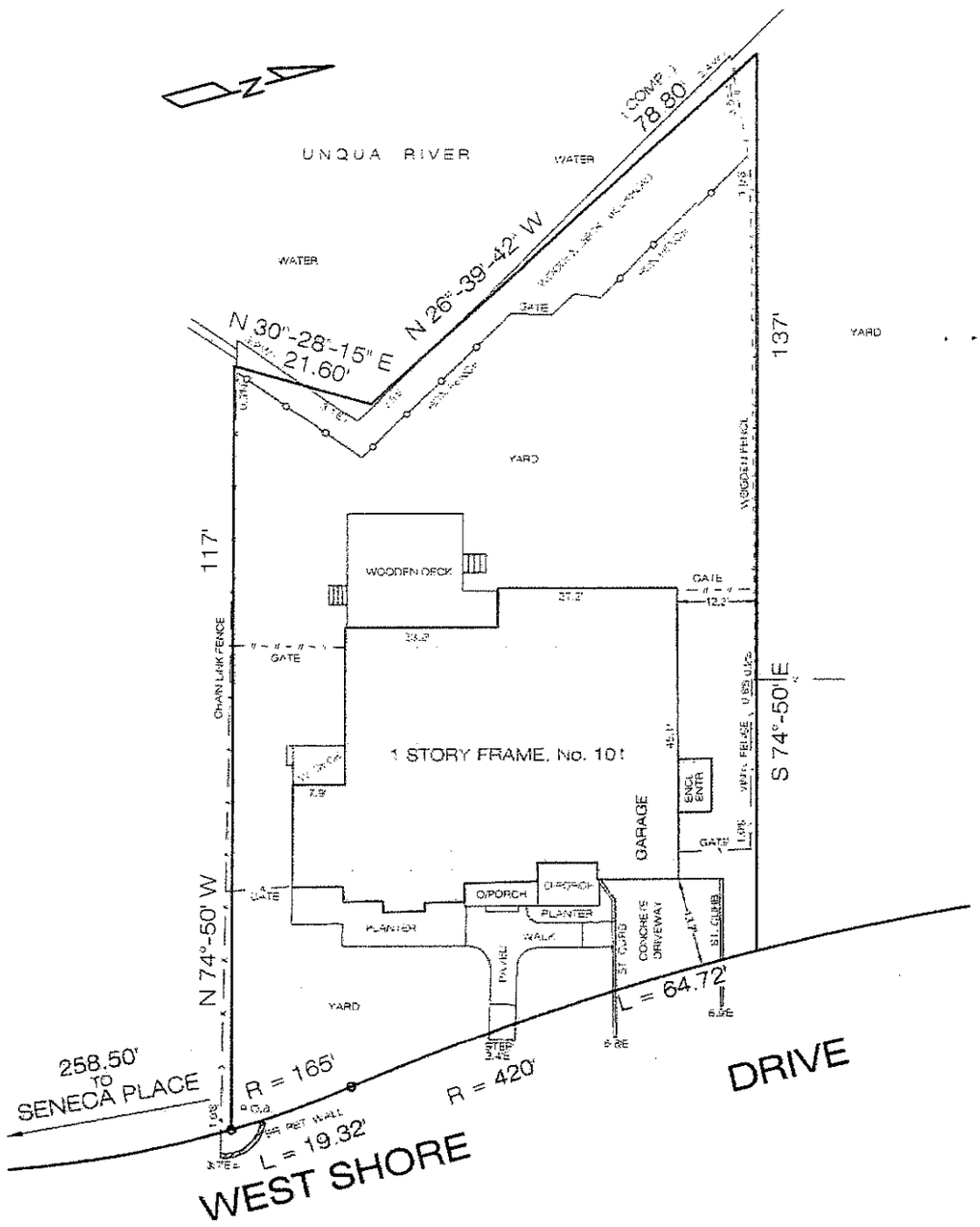

1. GUARANTEES OR CERTIFICATIONS INDICATED HEREON SHALL RUN ONLY TO THE PERSON FOR WHOM THE SURVEY IS PREPARED AND ON HIS BEHALF TO THE TITLE COMPANY, GOVERNMENTAL AGENCY AND LENDING INSTITUTION LISTED HEREON AND TO THE ASSIGNEES OF THE LENDING INSTITUTION. GUARANTEES OR CERTIFICATIONS ARE NOT TRANSFERABLE TO ADDITIONAL INSTITUTIONS OR SUBSEQUENT OWNERS.
2. NO GUARANTEE IS IMPLIED BY THIS MAP AS TO THE EXISTENCE OR NONEXISTENCE OF ANY EASEMENTS OF RECORD THAT WOULD AFFECT SUBJECT PROPERTY, UNLESS SURVEYOR HAS BEEN FURNISHED WITH SUCH INFORMATION.
3. THIS MAP WAS MADE AT A SCALE OF 1"=16' WHEN ORIGINALLY DRAWN
4. PROPERTY CORNER MONUMENTS WERE NOT PLACED AS PART OF THIS SURVEY
5. IT IS A VIOLATION OF THE STATE EDUCATION LAW FOR ANY PERSON, UNLESS ACTING UNDER THE DIRECTION OF A LICENSED LAND SURVEYOR TO ALTER AN ITEM IN ANY WAY.
6. ARCHITECTS MUST ORDER A TOPOGRAPHICAL MAP SPECIFYING THEIR EXACT NEEDS
7. ALL ELEVATIONS SHOWN IF ANY REFER TO THE NAVD1988
8. ONLY COPIES FROM THE ORIGINAL OF THIS SURVEY MARKED WITH AN ORIGINAL OF THE LAND SURVEYORS INKED SEAL SHALL BE CONSIDERED TO BE VALID TRUE COPIES

CERTIFIED TO:

TITLE No.

2k72 MAPPING INC.
LAND SURVEYING
92-55 218th PLACE
QUEENS VILLAGE
N.Y. 11428
TELEPHONE (347) 264-4800
EMAIL: 2K72MAPPING@GMAIL.COM
DRAWN BY: L.C.

SURVEY No. J011150
TOWN OF OYSTER BAY
COUNTY OF NASSAU
STATE OF NEW YORK

TAX MAP	FILED MAP
DISTRICT	SECTION
SECTION 65	BLOCK
BLOCK 93	LOT
LOT 66-69	

DATE: OCTOBER 2nd, 2018

STATE OF NEW YORK
VINCENT TEUTONICO
050307
LICENSED LAND SURVEYOR

VINCENT TEUTONICO, L.S.
NEW YORK LICENSE 050307

Short Environmental Assessment Form
Part 1 - Project Information

Instructions for Completing

Part 1 - Project Information. The applicant or project sponsor is responsible for the completion of Part 1. Responses become part of the application for approval or funding, are subject to public review, and may be subject to further verification. Complete Part 1 based on information currently available. If additional research or investigation would be needed to fully respond to any item, please answer as thoroughly as possible based on current information.

Complete all items in Part 1. You may also provide any additional information which you believe will be needed by or useful to the lead agency; attach additional pages as necessary to supplement any item.

Part 1 - Project and Sponsor Information

Name of Action or Project:
BULKHEAD RECONSTRUCTION & DOCK INSTALLATION | SIGNORELLI RESIDENCE

Project Location (describe, and attach a location map):
PROJECT IS LOCATED IN THE VILLAGE OF MASSAPEQUA, IN THE TOWN OF OYSTER BAY, IN NASSAU COUNTY, NY. THE PROJECT SITE IS APPROXIMATELY 1.2 MILES SOUTH OF SUNRISE AND 3.4 MILES EAST OF THE WANTAGH PARKWAY.

Brief Description of Proposed Action:
(A) RECONSTRUCT 108 LF TIMBER BULKHEAD IN-PLACE WITH VINYL SHEET PILE AND ELEVATED 18 IN; (B) INSTALL HEAD DOCK (20X8 FT = 160 SF); (C) INSTALL FLOATING DOCK (20X6 FT = 120 SF); (D) INSTALL BOAT LIFT; (E) INSTALL GANGWAY; (F) DREDGE 10 FT SEAWARD OF THE BULKHEAD TO A DEPTH OF 4 FT BELOW THE MLW ELEVATION TO BE USED AS BACKFILL FOR BULKHEAD.

Name of Applicant or Sponsor:	Telephone: (516) 322-0311
MR. DONALD SIGNORELLI	E-Mail: DON@NPMGROUP.COM

Address:
101 WEST SHORE ROAD DRIVE

City/PO:	State:	Zip Code:
MASSAPEQUA	NY	11758

	NO	YES
1. Does the proposed action only involve the legislative adoption of a plan, local law, ordinance, administrative rule, or regulation? If Yes, attach a narrative description of the intent of the proposed action and the environmental resources that may be affected in the municipality and proceed to Part 2. If no, continue to question 2.	☑	☐
2. Does the proposed action require a permit, approval or funding from any other governmental Agency? If Yes, list agency(s) name and permit or approval: USACE, NYS DOS, NYS DEC, NYS OGS	☐	☑

3.a. Total acreage of the site of the proposed action? 0.3 acres
b. Total acreage to be physically disturbed? < 0.1 acres
c. Total acreage (project site and any contiguous properties) owned or controlled by the applicant or project sponsor? 0.3 acres

4. Check all land uses that occur on, adjoining and near the proposed action.
☐ Urban ☐ Rural (non-agriculture) ☐ Industrial ☐ Commercial ☑ Residential (suburban)
☐ Forest ☐ Agriculture ☑ Aquatic ☐ Other (specify): _____
☐ Parkland

	NO	YES	N/A
5. Is the proposed action,			
a. A permitted use under the zoning regulations?	☐	☑	☐
b. Consistent with the adopted comprehensive plan?	☐	☑	☐

	NO	YES
6. Is the proposed action consistent with the predominant character of the existing built or natural landscape?	☐	☑
7. Is the site of the proposed action located in, or does it adjoin, a state listed Critical Environmental Area? If Yes, identify:	☑	☐
8. a. Will the proposed action result in a substantial increase in traffic above present levels?	☑	☐
b. Are public transportation service(s) available at or near the site of the proposed action?	☑	☐
c. Are any pedestrian accommodations or bicycle routes available on or near site of the proposed action?	☑	☐
9. Does the proposed action meet or exceed the state energy code requirements? If the proposed action will exceed requirements, describe design features and technologies: NOT APPLICABLE FOR THE PROPOSED ACTION	☑	☐
10. Will the proposed action connect to an existing public/private water supply? If No, describe method for providing potable water: NOT APPLICABLE FOR THE PROPOSED ACTION	☑	☐
11. Will the proposed action connect to existing wastewater utilities? If No, describe method for providing wastewater treatment: NOT APPLICABLE FOR THE PROPOSED ACTION	☑	☐
12. a. Does the site contain a structure that is listed on either the State or National Register of Historic Places?	☑	☐
b. Is the proposed action located in an archeological sensitive area?	☑	☐
13. a. Does any portion of the site of the proposed action, or lands adjoining the proposed action, contain wetlands or other waterbodies regulated by a federal, state or local agency?	☐	☑
b. Would the proposed action physically alter, or encroach into, any existing wetland or waterbody? If Yes, identify the wetland or waterbody and extent of alterations in square feet or acres: PROPOSED ACTION INCLUDE INSTALLATION OF 280 SF OF FLOATING DOCKS ALONG THE UNQUE RIVER.	☐	☐

14. Identify the typical habitat types that occur on, or are likely to be found on the project site. Check all that apply:

☑ Shoreline ☐ Forest ☐ Agricultural/grasslands ☐ Early mid-successional

☑ Wetland ☐ Urban ☑ Suburban

	NO	YES
15. Does the site of the proposed action contain any species of animal, or associated habitats, listed by the State or Federal government as threatened or endangered?	☑	☐
16. Is the project site located in the 100 year flood plain?	☐	☑
17. Will the proposed action create storm water discharge, either from point or non-point sources? If Yes, a. Will storm water discharges flow to adjacent properties? ☐ NO ☐ YES	☑	☐
b. Will storm water discharges be directed to established conveyance systems (runoff and storm drains)? If Yes, briefly describe: ☐ NO ☐ YES		

	NO	YES
18. Does the proposed action include construction or other activities that result in the impoundment of water or other liquids (e.g. retention pond, waste lagoon, dam)? If Yes, explain purpose and size:	✓	
19. Has the site of the proposed action or an adjoining property been the location of an active or closed solid waste management facility? If Yes, describe:	✓	
20. Has the site of the proposed action or an adjoining property been the subject of remediation (ongoing or completed) for hazardous waste? If Yes, describe:	✓	

I AFFIRM THAT THE INFORMATION PROVIDED ABOVE IS TRUE AND ACCURATE TO THE BEST OF MY KNOWLEDGE

Applicant/sponsor name: ADON M. AUSTIN, PE Date: 20 DECEMBER 2018

Signature:

PRINT FORM

EAF Mapper Summary Report

Friday, December 21, 2018 12:23 PM

1 8 0 3 0 4 3 3

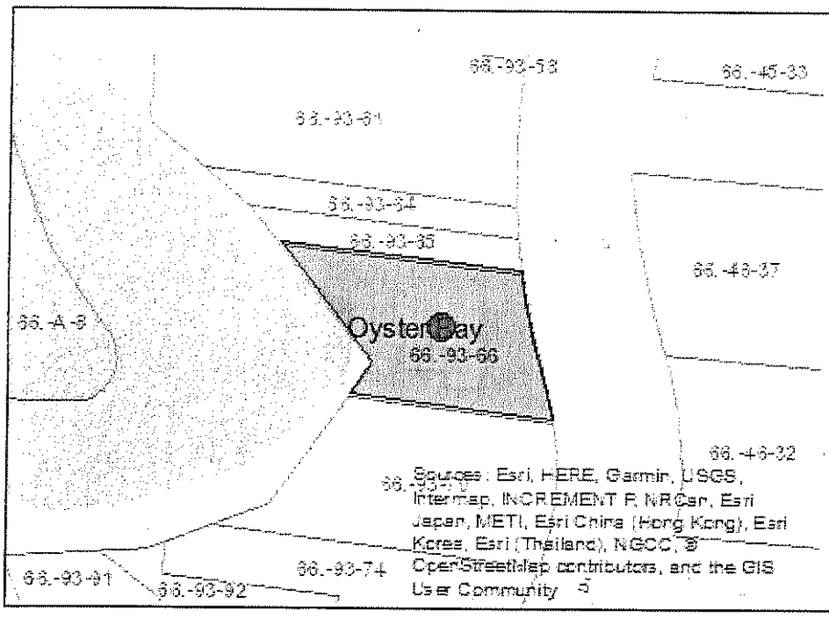

Disclaimer: The EAF Mapper is a screening tool intended to assist project sponsors and reviewing agencies in preparing an environmental assessment form (EAF). Not all questions asked in the EAF are answered by the EAF Mapper. Additional information on any EAF question can be obtained by consulting the EAF Workbooks. Although the EAF Mapper provides the most up-to-date digital data available to DEC, you may also need to contact local or other data sources in order to obtain data not provided by the Mapper. Digital data is not a substitute for agency determinations.

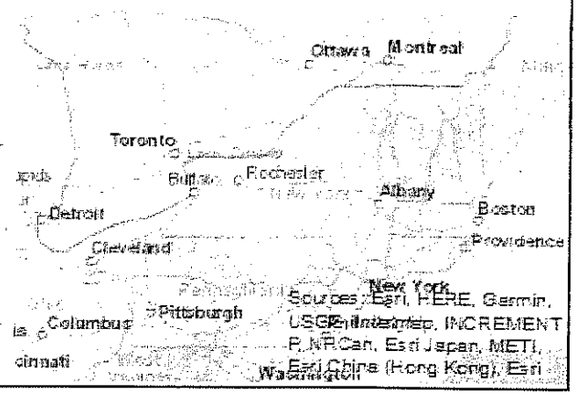

Part 1 / Question 7 [Critical Environmental Area]	No
Part 1 / Question 12a [National Register of Historic Places]	No
Part 1 / Question 12b [Archeological Sites]	Yes
Part 1 / Question 13a [Wetlands or Other Regulated Waterbodies]	Yes - Digital mapping information on local and federal wetlands and waterbodies is known to be incomplete. Refer to EAF Workbook.
Part 1 / Question 15 [Threatened or Endangered Animal]	No
Part 1 / Question 16 [100 Year Flood Plain]	Yes
Part 1 / Question 20 [Remediation Site]	No

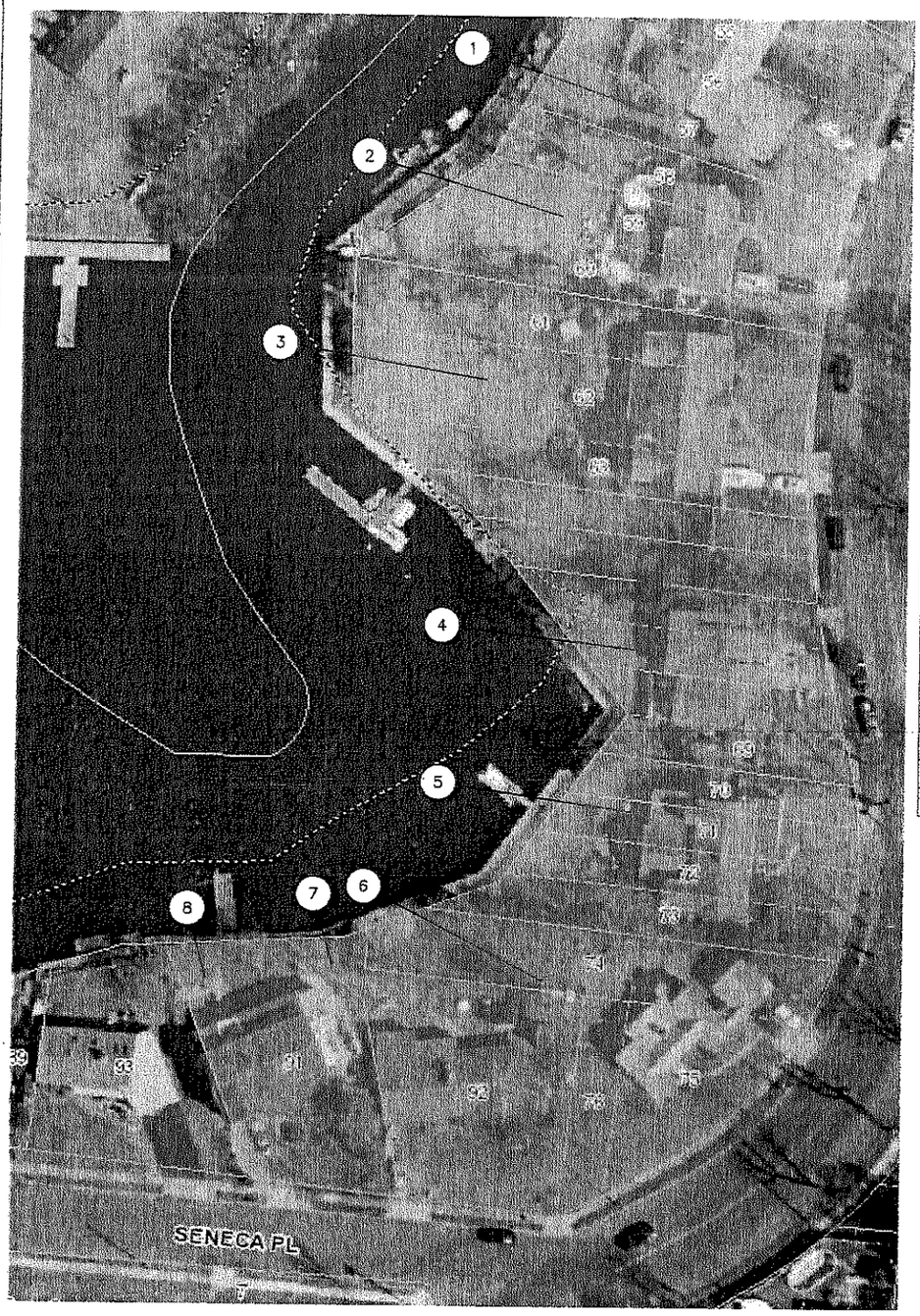

TABLE OF PROPERTIES		
ID	OWNER	ADDRESS
1	SARABELLA ADLER	85 W SHORE DR
2	RALPH TIETJE	91 W SHORE DR
3	MATTHEW ARCERI	93 W SHORE DR
4	DONLAD SIGNORELLI	LOCATION OF WORK
5	VIRGINIA ARCERI	105 W SHORE DR
6	MATTHEW POKALSKY	111 W SHORE DR
7	KEVIN MCDONNELL	1 SENECA PL
8	PAUL DINUNZIO	5 SENECA PL

RADIUS MAP

N.T.S.

SHEET NO.	PROJECT NO.	PROJECT	SCALE	
IL-1	P181214.00	WATERFRONT IMPROVEMENT PREPARED FOR MR. DONALD SIGNORELLI LOCATED AT 101 WEST SHORE DRIVE	N.T.S.	Rising Tide | Waterfront Solutions
1 OF 1 SHEET(S)	DRAWN BY JMK		DATE 03/12/19	486 SUNRISE HIGHWAY, SUITE 102 ROCKVILLE CENTRE, NEW YORK 11570
	CHECKED BY AMA	MASSAPEQUA, NY UNQUA RIVER NASSAU COUNTY	REVISION NO. 0	SHEET RADIUS MAP

NEW YORK STATE DEPARTMENT OF ENVIRONMENTAL CONSERVATION

Division of Environmental Permits, Region 1
SUNY @ Stony Brook, 50 Circle Road, Stony Brook, NY 11790
P: (631) 444-0365 | F: (631) 444-0360
www.dec.ny.gov

March 1, 2019

Donald Signorelli
101 W. Shore Dr
Massapequa, NY 11758

Re: Permit ID 1-2824-03320/00001
Signorelli Property
101 W. Shore Drive
Massapequa
Expiration Date: 3/5/2024

Dear Permittees:

In conformance with the requirements of the State Uniform Procedures Act (Article 70, ECL) and its implementing regulations (6 NYCRR, Part 621) we are enclosing your permit. Please carefully read all permit conditions contained in the permit to ensure compliance during the term of the permit. If you are unable to comply with any conditions, please contact us at the above address.

Also enclosed is a permit sign which is to be conspicuously posted at the project site and protected from the weather, and a Notice of Commencement / Completion of Construction. Please note, the permit sign and Notice of Commencement / Completion of Construction form are sent to either the permittee or the facility application contact, not both.

Sincerely,

Matthew R. Penski
Environmental Analyst

Distribution List:
Rising Tide | Waterfront Solutions
Marine Habitat Protection
File

19030133

PERMIT

Under the Environmental Conservation Law (ECL)

Permittee and Facility Information

Permit Issued To:
DONALD SIGNORELLI
101 W SHORE DR
MASSAPEQUA, NY 11758-8232

Facility:
SIGNORELLI PROPERTY
101 W SHORE DR
MASSAPEQUA, NY 11758

Facility Application Contact:
RISING TIDE WATERFRONT SOLUTIONS -
AN ENGINEERING COMPANY, PLLC
C/O ADON AUSTIN
486 SUNRISE HWY STE 102
ROCKVILLE CENTRE, NY 11570

Facility Location: in OYSTER BAY in NASSAU COUNTY
Facility Principal Reference Point: NYTM-E: 631.425 NYTM-N: 4502.333
Latitude: 40°39'41.1" Longitude: 73°26'43.0"
Project Location: 101 W. Shore Drive, Massapequa
Authorized Activity: Remove and replace in-place and up to 18 inches higher 108 linear feet of existing bulkhead, install two 6-foot returns and remove and replace the existing boardwalk and decking landward of the bulkhead. Maintenance dredge to a depth of -4 feet mean low water an area no greater than 10 feet off shore of the bulkhead and use the resultant 25 cubic yards of material as backfill for the bulkhead. Install a boat lift, 3-foot by 15-foot gangway, 8-foot by 20-foot float, 6-foot by 20-foot float, and install two mooring piles. All work shall be performed in accordance with the plans prepared by Rising Tide | Waterfront Solutions on 2/7/19, and stamped "NYSDEC APPROVED" on 3/1/2019.

Permit Authorizations

Tidal Wetlands - Under Article 25
Permit ID 1-2824-03320/00001
New Permit Effective Date: 3/6/2019 Expiration Date: 3/5/2024
Water Quality Certification - Under Section 401 - Clean Water Act
Permit ID 1-2824-03320/00002
New Permit Effective Date: 3/6/2019 Expiration Date: 3/5/2024
Excavation & Fill in Navigable Waters - Under Article 15, Title 5
Permit ID 1-2824-03320/00003
New Permit Effective Date: 3/6/2019 Expiration Date: 3/5/2024

18030433

NYSDEC Approval

By acceptance of this permit, the permittee agrees that the permit is contingent upon strict compliance with the ECL, all applicable regulations, and all conditions included as part of this permit.

Permit Administrator: JOHN A WIELAND, Deputy Regional Permit Administrator
Address: NYSDEC Region 1 Headquarters
SUNY @ Stony Brook|50 Circle Rd
Stony Brook, NY 11790 -3409

Authorized Signature: _____ Date 03/01/2019

Distribution List

RISING TIDE WATERFRONT SOLUTIONS - AN ENGINEERING COMPANY, PLLC
Marine Habitat Protection
Environmental Permits

Permit Components

NATURAL RESOURCE PERMIT CONDITIONS

WATER QUALITY CERTIFICATION SPECIFIC CONDITION

GENERAL CONDITIONS, APPLY TO ALL AUTHORIZED PERMITS

NOTIFICATION OF OTHER PERMITTEE OBLIGATIONS

NATURAL RESOURCE PERMIT CONDITIONS - Apply to the Following Permits: TIDAL WETLANDS; WATER QUALITY CERTIFICATION; EXCAVATION & FILL IN NAVIGABLE WATERS

1. **Conformance With Plans** All activities authorized by this permit must be in strict conformance with the approved plans submitted by the applicant or applicant's agent as part of the permit application. Such approved plans were prepared by Rising Tide | Waterfront Solutions on 2/7/19, and stamped "NYSDEC APPROVED" on 3/1/2019.

2. **Notice of Commencement** At least 48 hours prior to commencement of the project, the permittee and contractor shall sign and return the top portion of the enclosed notification form certifying that they are fully aware of and understand all terms and conditions of this permit. Within 30 days of completion of project, the bottom portion of the form must also be signed and returned, along with photographs of the completed work.

3. **Post Permit Sign** The permit sign enclosed with this permit shall be posted in a conspicuous location on the worksite and adequately protected from the weather.

4. **Storage of Equipment, Materials** The storage of construction equipment and materials shall be confined to the upland area landward of the bulkhead or on a barge.

5. **Excavation for Bulkhead/Structure** Prior to any construction or removal of bulkheads and other shoreline stabilization structures all backfill shall be excavated landward of the structure and retained so as not to enter the waterway, tidal wetland or protected buffer area.

6. **No Seaward Extension of Bulkhead** The new bulkhead shall be constructed in place of the existing bulkhead with no seaward extension of the outermost bulkhead face.

7. **Replacement Bulkhead Maximum Height** The top elevation of the replacement bulkhead shall be no more than 18 inches higher than the existing bulkhead.

8. **Backfilling** All peripheral berms, cofferdams, rock revetments, seawalls, gabions, bulkheads or other approved shoreline stabilization structures shall be completed prior to placement of any fill material behind such structures.

9. **No Structures on Bulkhead** No permanent structures shall be installed on the authorized bulkhead without first obtaining written department approval (permit, modification, amendment).

10. **No Runoff Over or Through Bulkhead or into Wetland** There shall be no discharge of runoff or other effluent over or through any bulkhead or shoreline stabilization structure or into any tidal wetland or protected buffer area.

11. **Use of Treated Wood** The use of wood treated with Pentachlorophenol or other wood treatment not specifically approved by the Department for use in wetlands and/or marine waters, is strictly prohibited in the construction of structures that will be in contact with tidal waters.

12. **Bulkhead Decking** No portion of the decking or boardwalk shall extend seaward of the bulkhead sheathing.

13. **Clean Fill Only** All fill shall consist of clean sand, gravel, or soil (not asphalt, slag, flyash, broken concrete or demolition debris).

14. **Restrict Spillage, Use Closed Bucket** During the dredging operation, the permittee and his contractor shall prevent spillage of sediment during excavation and haulage. Dredging shall be accomplished with a clam shell or other closed bucket equipment or hydraulic dredge equipment.

15. **Dredgings to Remain On-Site/Within Wetland** Dredge material approved to remain on-site and/or within the NYSDEC Tidal Wetlands jurisdiction shall be retained so as not to enter any water body, tidal wetlands, or protected buffer areas. Off-site, upland disposal of dredged material beyond NYSDEC Tidal Wetland jurisdiction requires the additional guidance of the Division of Materials Management (631) 444-0375 and is not covered by this permit.

16. **No Side-casting or Temporary Storage** Excavated sediments shall be placed directly into the approved disposal site/dewatering site or conveyance vehicle. No side-casting (double-dipping) or temporary storage of excavated sediments is authorized.

17. **Leave a Uniform Bottom Elevation** All dredging shall be conducted so as to leave a uniform bottom elevation free of mounds or holes.

18. **Materials Disposed at Upland Site** Any demolition debris, excess construction materials, and/or excess excavated materials shall be immediately and completely disposed of in an authorized solid waste management facility. These materials shall be suitably stabilized as not to re-enter any water body, wetland or wetland adjacent area.

19. **Contain Exposed, Stockpiled Soils** All disturbed areas where soil will be temporarily exposed or stockpiled for longer than 48 hours shall be contained by a continuous line of staked haybales / silt curtains (or other NYSDEC approved devices) placed on the seaward side between the fill and the wetland or protected buffer area. Tarps are authorized to supplement these approved methods.

20. **Maintain Erosion Controls** All erosion control devices shall be maintained in good and functional condition until the project has been completed and the area has been stabilized.

21. **Boat Lifts at Property Lines** Boat lift/davit shall not:

    a. extend laterally beyond property lines,

    b. interfere with navigation, or

    c. interfere with other landowners riparian rights.

22. **Docks at Property Lines** Docks/catwalks/floats must not:

    a. extend laterally beyond property lines,

    b. interfere with navigation, or

    c. interfere with other landowners riparian rights.

23. **No Permanent Structures on Dock** No permanent structures shall be installed on dock/catwalk/float without first obtaining written Department approval (permit, modification, or amendment).

24. **Float Installation** The float shall be installed only at the approved location with a minimum water depth of 2½ feet, measured at apparent low tide.

25. **No Floats, Ramps in Vegetated Tidal Wetlands** Floats and ramps may not rest on or be stored in any vegetated tidal wetland.

26. **Pilings at Property Lines** Pilings shall not:

a. extend laterally beyond property lines,

b. interfere with navigation, or

c. interfere with other landowners riparian rights.

27. **No Structures on Pilings** No structures, other than structures specifically authorized by this permit, shall be constructed on pilings without further authorization from the department (permit, modification or amendment).

28. **No Prop Dredging** Prop dredging, or the act of utilizing and/or directing the propeller or propulsion system of a motorized vessel and/or the water-borne forces created by said propeller or propulsion system, to excavate or displace existing bottom sediment and benthic habitat for the direct or indirect purpose of establishing or increasing water depth, is a regulated activity and is not authorized by this permit. Prop dredging is strictly prohibited without further written authorization (permit, modification or amendment) from the department.

29. **No Disturbance to Vegetated Tidal Wetlands** There shall be no disturbance to vegetated tidal wetlands or protected buffer areas as a result of the permitted activities.

30. **No Construction Debris in Wetland or Adjacent Area** Any debris or excess material from construction of this project shall be completely removed from the adjacent area (upland) and removed to an approved upland area for disposal. No debris is permitted in wetlands and/or protected buffer areas.

31. **No Interference With Navigation** There shall be no unreasonable interference with navigation by the work herein authorized.

32. **State Not Liable for Damage** The State of New York shall in no case be liable for any damage or injury to the structure or work herein authorized which may be caused by or result from future operations undertaken by the State for the conservation or improvement of navigation, or for other purposes, and no claim or right to compensation shall accrue from any such damage.

33. **State May Order Removal or Alteration of Work** If future operations by the State of New York require an alteration in the position of the structure or work herein authorized, or if, in the opinion of the Department of Environmental Conservation it shall cause unreasonable obstruction to the free navigation of said waters or flood flows or endanger the health, safety or welfare of the people of the State, or cause loss or destruction of the natural resources of the State, the owner may be ordered by the Department to remove or alter the structural work, obstructions, or hazards caused thereby without expense to the State, and if, upon the expiration or revocation of this permit, the structure, fill, excavation, or other modification of the watercourse hereby authorized shall not be completed, the owners, shall, without expense to the State, and to such extent and in such time and manner as the Department of Environmental Conservation may require, remove all or any portion of the uncompleted structure or fill and restore to its former condition the navigable and flood capacity of the watercourse. No claim shall be made against the State of New York on account of any such removal or alteration.

34. **State May Require Site Restoration** If upon the expiration or revocation of this permit, the project hereby authorized has not been completed, the applicant shall, without expense to the State, and to such extent and in such time and manner as the Department of Environmental Conservation may lawfully require, remove all or any portion of the uncompleted structure or fill and restore the site to its former condition. No claim shall be made against the State of New York on account of any such removal or alteration.

35. **Precautions Against Contamination of Waters** All necessary precautions shall be taken to preclude contamination of any wetland or waterway by suspended solids, sediments, fuels, solvents, lubricants, epoxy coatings, paints, concrete, leachate or any other environmentally deleterious materials associated with the project.

WATER QUALITY CERTIFICATION SPECIFIC CONDITIONS

1. **Water Quality Certification** The authorized project, as conditioned pursuant to the Certificate, complies with Section 301, 302, 303, 306, and 307 of the Federal Water Pollution Control Act, as amended and as implemented by the limitations, standards, and criteria of state statutory and regulatory requirements set forth in 6 NYCRR Section 608.9(a). The authorized project, as conditioned, will also comply with applicable New York State water quality standards, including but not limited to effluent limitations, best usages and thermal discharge criteria, as applicable, as set forth in 6 NYCRR Parts 701, 702, 703, and 704.

GENERAL CONDITIONS - Apply to ALL Authorized Permits:

1. **Facility Inspection by The Department** The permitted site or facility, including relevant records, is subject to inspection at reasonable hours and intervals by an authorized representative of the Department of Environmental Conservation (the Department) to determine whether the permittee is complying with this permit and the ECL. Such representative may order the work suspended pursuant to ECL 71- 0301 and SAPA 401(3).

The permittee shall provide a person to accompany the Department's representative during an inspection to the permit area when requested by the Department.

A copy of this permit, including all referenced maps, drawings and special conditions, must be available for inspection by the Department at all times at the project site or facility. Failure to produce a copy of the permit upon request by a Department representative is a violation of this permit.

2. **Relationship of this Permit to Other Department Orders and Determinations** Unless expressly provided for by the Department, issuance of this permit does not modify, supersede or rescind any order or determination previously issued by the Department or any of the terms, conditions or requirements contained in such order or determination.

3. **Applications For Permit Renewals, Modifications or Transfers** The permittee must submit a separate written application to the Department for permit renewal, modification or transfer of this permit. Such application must include any forms or supplemental information the Department requires. Any renewal, modification or transfer granted by the Department must be in writing. Submission of applications for permit renewal, modification or transfer are to be submitted to:

Regional Permit Administrator
NYSDEC Region 1 Headquarters
SUNY @ Stony Brook|50 Circle Rd
Stony Brook, NY11790 -3409

4. **Submission of Renewal Application** The permittee must submit a renewal application at least 30 days before permit expiration for the following permit authorizations: Excavation & Fill in Navigable Waters, Tidal Wetlands, Water Quality Certification.

5. **Permit Modifications, Suspensions and Revocations by the Department** The Department reserves the right to exercise all available authority to modify, suspend or revoke this permit. The grounds for modification, suspension or revocation include:

a. materially false or inaccurate statements in the permit application or supporting papers;

b. failure by the permittee to comply with any terms or conditions of the permit;

c. exceeding the scope of the project as described in the permit application;

d. newly discovered material information or a material change in environmental conditions, relevant technology or applicable law or regulations since the issuance of the existing permit;

e. noncompliance with previously issued permit conditions, orders of the commissioner, any provisions of the Environmental Conservation Law or regulations of the Department related to the permitted activity.

6. **Permit Transfer** Permits are transferrable unless specifically prohibited by statute, regulation or another permit condition. Applications for permit transfer should be submitted prior to actual transfer of ownership.

NOTIFICATION OF OTHER PERMITTEE OBLIGATIONS

Item A: Permittee Accepts Legal Responsibility and Agrees to Indemnification
The permittee, excepting state or federal agencies, expressly agrees to indemnify and hold harmless the Department of Environmental Conservation of the State of New York, its representatives, employees, and agents ("DEC") for all claims, suits, actions, and damages, to the extent attributable to the permittee's acts or omissions in connection with the permittee's undertaking of activities in connection with, or operation and maintenance of, the facility or facilities authorized by the permit whether in compliance or not in compliance with the terms and conditions of the permit. This indemnification does not extend to any claims, suits, actions, or damages to the extent attributable to DEC's own negligent or

intentional acts or omissions, or to any claims, suits, or actions naming the DEC and arising under Article 78 of the New York Civil Practice Laws and Rules or any citizen suit or civil rights provision under federal or state laws.

Item B: Permittee's Contractors to Comply with Permit
The permittee is responsible for informing its independent contractors, employees, agents and assigns of their responsibility to comply with this permit, including all special conditions while acting as the permittee's agent with respect to the permitted activities, and such persons shall be subject to the same sanctions for violations of the Environmental Conservation Law as those prescribed for the permittee.

Item C: Permittee Responsible for Obtaining Other Required Permits
The permittee is responsible for obtaining any other permits, approvals, lands, easements and rights-of-way that may be required to carry out the activities that are authorized by this permit.

Item D: No Right to Trespass or Interfere with Riparian Rights
This permit does not convey to the permittee any right to trespass upon the lands or interfere with the riparian rights of others in order to perform the permitted work nor does it authorize the impairment of any rights, title, or interest in real or personal property held or vested in a person not a party to the permit.

18030433

WATERFRONT IMPROVEMENT
101 WEST SHORE DRIVE
MASSAPEQUA, NY 11758
7 FEBRUARY 2019

FOR REGULATORY PERMIT
NOT FOR CONSTRUCTION

LOCATION MAP

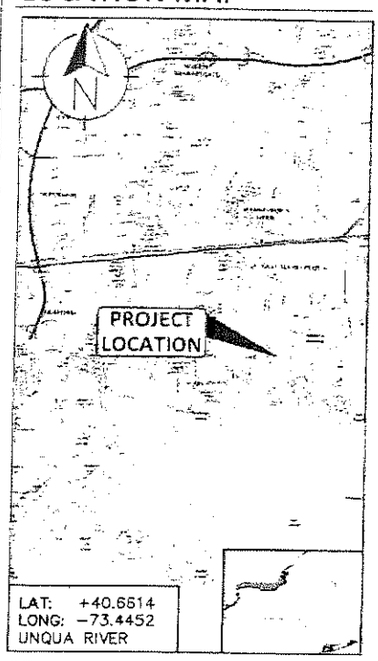

REF: AMITYVILLE QUADRANGLE NEW YORK 7.5–MINUTE SERIES

PROJECT INFORMATION

LOCATION

PRIVATE RESIDENCE OF MR. DONALD SIGNORELLI, 101 WEST SHORE DRIVE, IN THE TOWN OF OYSTER BAY, NASSAU COUNTY, NEW YORK ALONG UNQUA RIVER.

PROJECT NOTIFICATION

COMMENCEMENT NOTIFICATION TO REGULATORY AGENCY SHALL BE SUBMITTED, AS REQUIRED, BY SELECTED CONTRACTOR PRIOR TO THE START OF WORK.

GENERAL CONTACT INFORMATION

RISING TIDE WATERFRONT SOLUTIONS, PLLC
486 SUNRISE HIGHWAY, SUITE 102
ROCKVILLE CENTRE, NY 11570
PHONE: 516–595–3483
EMAIL: CONTACT@RT–WS.COM

DEFINITION(S)

AUTHORITY: MR. DONALD SIGNORELLI
ENGINEER: RISING TIDE WATERFRONT SOLUTIONS, PLLC
CONTRACTOR: TO BE DETERMINED

1 of 6

1-2824-03320/00001
3/1/2019 MA

REVISION(S)

A: REGULATORY PERMIT APP 12–20–18
B: REGULATORY PERMIT RESPONSE 02–07–19

SKETCH INDEX

SCHEDULE 1-A: OVER-WATER COVERAGE ADDITION/REMOVAL

ITEM	QUANTITY (SF)	
	PRE-EVENT	EXISTING
ADDITION(S)	+0.00	+0.00
DEMO/REMOVAL	-0.00	-0.00
NET ADD/REMOVAL	±0.00	±0.00

SCHEDULE 1-B: TIDAL AREA CUT/FILL

ITEM	QUANTITY (CY)			
	PRE-EVENT		EXISTING	
	MHW	MHWS	MHW	MHWS
FILL	+0.00	+0.00	+0.00	+0.00
CUT	-0.00	-0.00	-0.00	-0.00
NET CUT/FILL	±0.00	±0.00	±0.00	±0.00

SCHEDULE 1-C: TIDAL CHART ELEVATION(S)

POSITION	MLW	NAVD88	DESCRIPTION
MHWS	+2.4	+1.3	MEAN HIGH WATER SPRING
MHHW	+2.3	+1.2	MEAN HIGHER HIGH WATER
MHW	+2.1	+1.0	MEAN HIGH WATER
MSL	+1.0	−0.1	MEAN SEA LEVEL
MLW	±0.0	−1.1	MEAN LOW WATER
MLLW	−0.1	−1.2	MEAN LOWER LOW WATER

PROJECT DESCRIPTION

REMOVE AND REPLACE 108 LINEAR FEET OF FUNCTIONING AND LAWFULLY EXISTING BULKHEAD, INCLUDING RETURNS AND PARALLEL CAPPING BOARDWALKS, WITHIN THE LITTORAL ZONE (DEF: 6 NYCRR PART 661) IN–PLACE (WITHOUT SEAWARD EXPANSION). THE REPLACEMENT BULKHEAD SHALL BE 18–INCHES HIGHER THAN THE EXISTING BULKHEAD. PROJECT INCLUDES MAINTENANCE DREDGING TEN (10) FT SEAWARD OF THE BULKHEAD TO A DEPTH OF 4 FT BELOW THE MEAN LOW WATER ELEVATION. PROJECT ALSO INCLUDES INSTALLATION OF A 20X8 HEAD DOCK, 20X6 FLOATING DOCK, BOAT LIFT, ACCESS GANGWAY AND MOORING PILES.

SHEET NO.	PROJECT NO.	PROJECT	SCALE	
SK-1	P181214.00	WATERFRONT IMPROVEMENT PREPARED FOR MR. DONALD SIGNORELLI LOCATED AT 101 WEST SHORE DRIVE	N/A	Rising Tide | Waterfront Solutions
	DRAWN BY: JHK		DATE: 02/07/19	486 SUNRISE HIGHWAY, SUITE 102 ROCKVILLE CENTRE, NEW YORK 11570
1 OF 7 SHEET(S)	CHECKED BY: AMA	MASSAPEQUA, NY UNQUA RIVER NASSAU COUNTY	REVISION NO. B	SHEET: TITLE SHEET & LOCATION MAP

18030488

FOR REGULATORY PERMIT
NOT FOR CONSTRUCTION

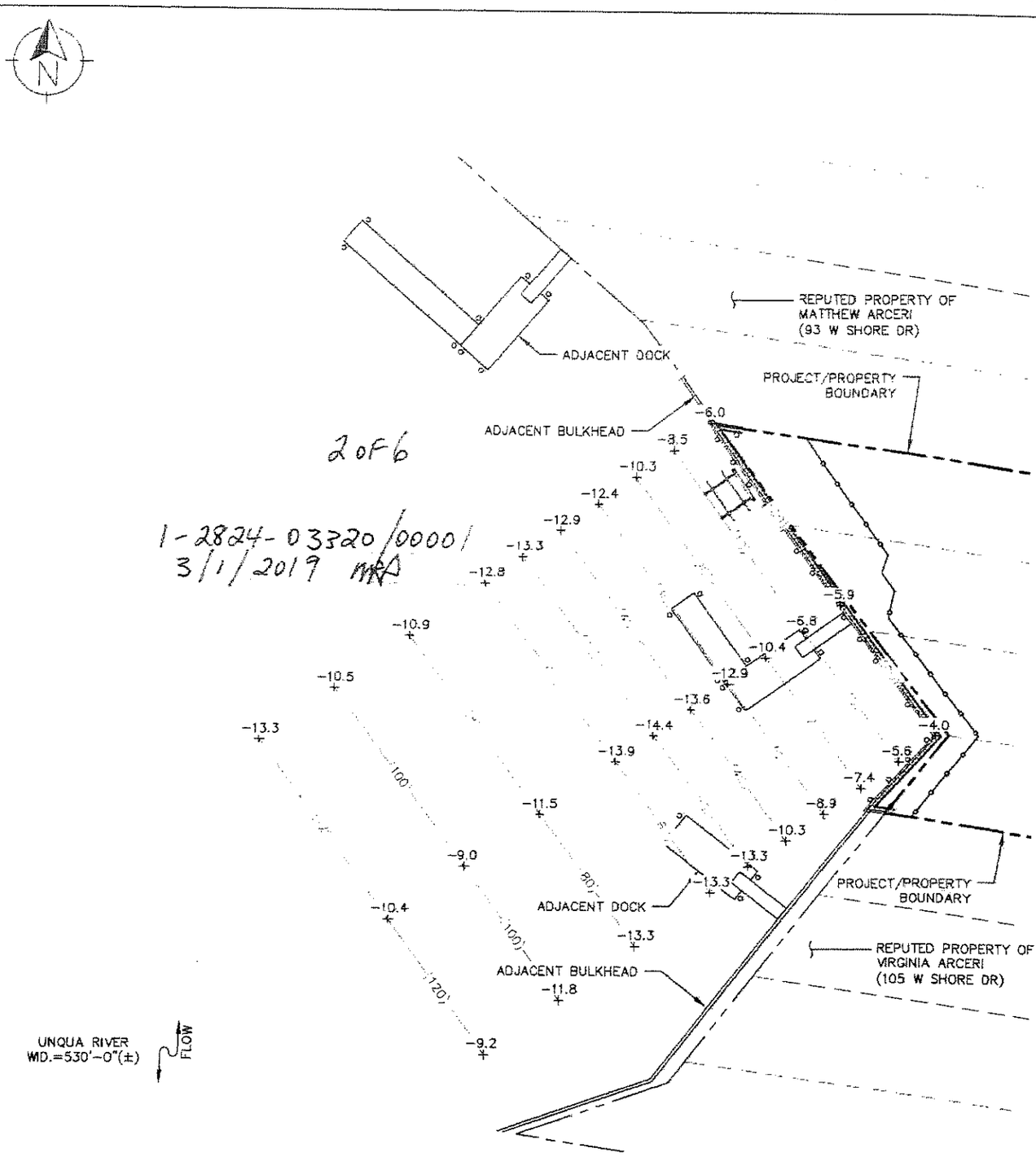

2 of 6

1-2824-03320/00001
3/1/2019 MKA

LEGEND:
-X.X: LAND UNDERWATER ELEVATION (NAVD 88)
-(XX)-: HORIZONTAL OFFSET FROM BULKHEAD FACE

HYDROGRAPHIC STUDY
LANDS UNDERWATER (DATUM: NAVD88 ELEVATION)

SCALE: 1"=30'-0"

SHEET NO. SK-5 6 OF 7 SHEET(S)	PROJECT NO. P181214.00	PROJECT WATERFRONT IMPROVEMENT PREPARED FOR MR. DONALD SIGNORELLI LOCATED AT 101 WEST SHORE DRIVE MASSAPEQUA, NY UNQUA RIVER NASSAU COUNTY	SCALE 1"=30'-0"	Rising Tide | Waterfront Solutions 486 SUNRISE HIGHWAY, SUITE 102 ROCKVILLE CENTRE, NEW YORK 11570
	DRAWN BY JMK		DATE 02/07/19	
	CHECKED BY AMA		REVISION NO. 8	SHEET LANDS UNDERWATER - NAVD88

19030433

ITEM	STATE	ACTION	SIZE
1. BULKHEAD	EXISTING	REMOVE & REPLACE	108 LF
2. FLOATING DOCK	PROPOSED	CONSTRUCT/INSTALL	20X6-FT=120 SF
3. FLOATING HEAD DOCK	PROPOSED	CONSTRUCT/INSTALL	20X8-FT=160 SF
4. SMALL CRAFT 4-PILE LIFT	PROPOSED	CONSTRUCT/INSTALL	22,000LBS
5. (2) MOORING PILE(S)	PROPOSED	CONSTRUCT/INSTALL	12"ø

TOTAL NUMBER OF PILES=30

FOR REGULATORY PERMIT
NOT FOR CONSTRUCTION

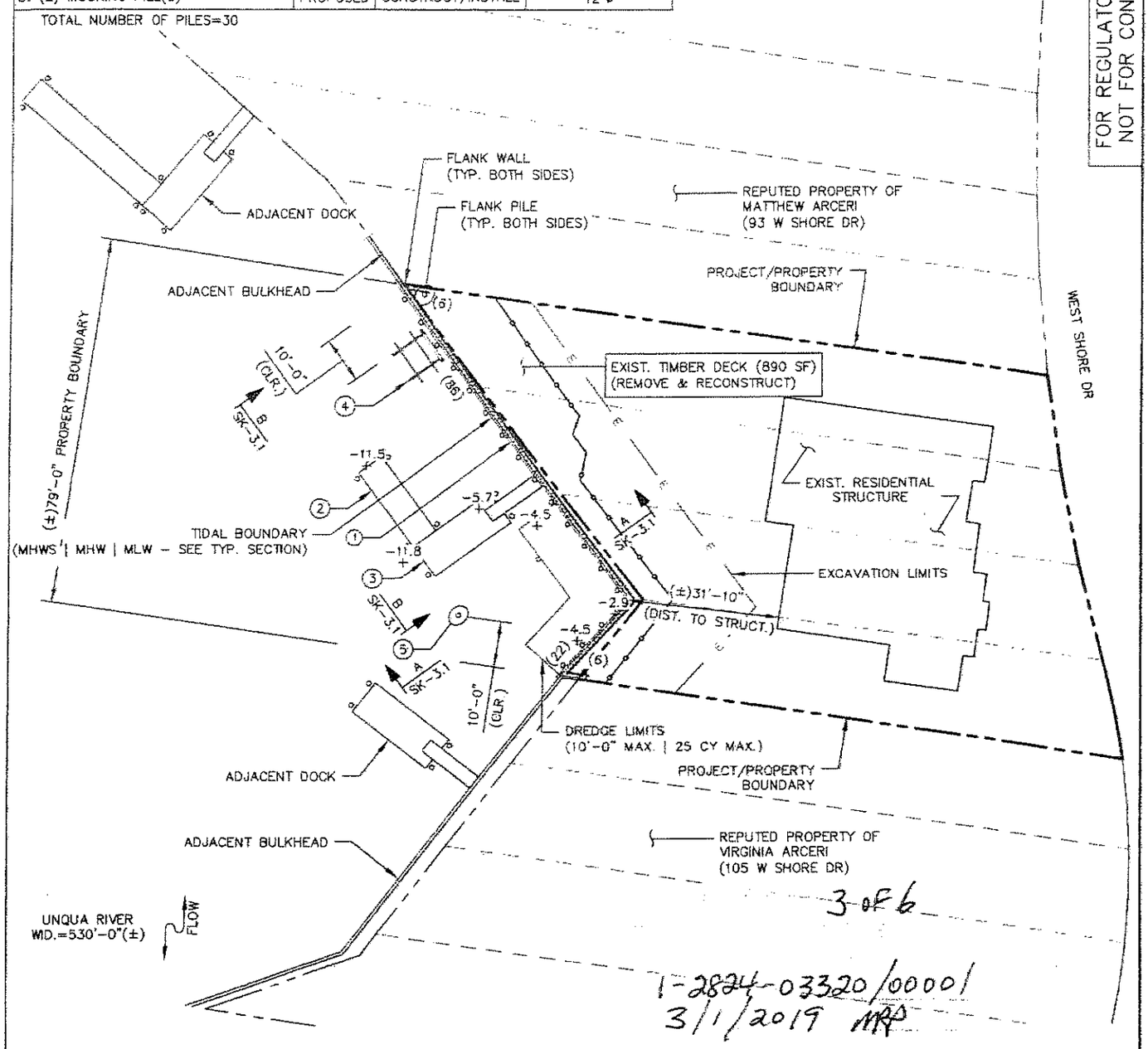

3 of 6

1-2824-03320/00001
3/1/2019 MRP

LEGEND:
(XX) BULKHEAD SEGMENT LENGTH
-X.X: DEPTH RELATED TO MLW

FACILITY PLAN

SCALE: 1"=30'-0"

SHEET NO.	PROJECT NO.	PROJECT	SCALE	Rising Tide | Waterfront Solutions
SK-2	P181214.00	WATERFRONT IMPROVEMENT PREPARED FOR MR. DONALD SIGNORELLI LOCATED AT 101 WEST SHORE DRIVE	1"=30'-0"	486 SUNRISE HIGHWAY, SUITE 102 ROCKVILLE CENTRE, NEW YORK 11570
2 OF 7 SHEET(S)	DRAWN BY: JMK		DATE: 02/07/19	SHEET: FACILITY PLAN
	CHECKED BY: AMA	MASSAPEQUA, NY UNQUA RIVER NASSAU COUNTY	REVISION NO.: B	

1 8 0 3 0 4 3 3

NOTE(S):
1. FILL: ALL FILL WILL BE CLEAN FREE DRAINING FREE OF CONTAMINANTS AND REGULATED WASTES INCLUDING CONSTRUCTION DEBRIS THAT IS SOURCED FROM NYS DEC APPROVED SITE.
2. BULKHEAD ELEVATION: T/PROPOSED BULKHEAD TO BE RAISED 18 INCHES HIGHER THAN EXISTING T/BULKHEAD ELEVATION.
3. DREDGE AREA LIMITED TO BOUNDARY SHOWN ON SK-2.

TIMBER TREATMENT

TREATMENT TYPE	ELEMENT	RETENTION	DESCRIPTION
1A	PILES	1.5	CCA TREATED PER LATEST AWPA STANDARDS, COMMODITY SPECIFICATION A.P 3.0
1B		2.5	
2A	FRAMING	1.5	CCA TREATED PER LATEST AWPA STANDARDS, COMMODITY SPECIFICATION A.P 3.0
2B		2.5	
3A	FRAMING	1.5	ACQ TREATED PER AWPA ACQ-D
3B		2.5	

FOR REGULATORY PERMIT
NOT FOR CONSTRUCTION

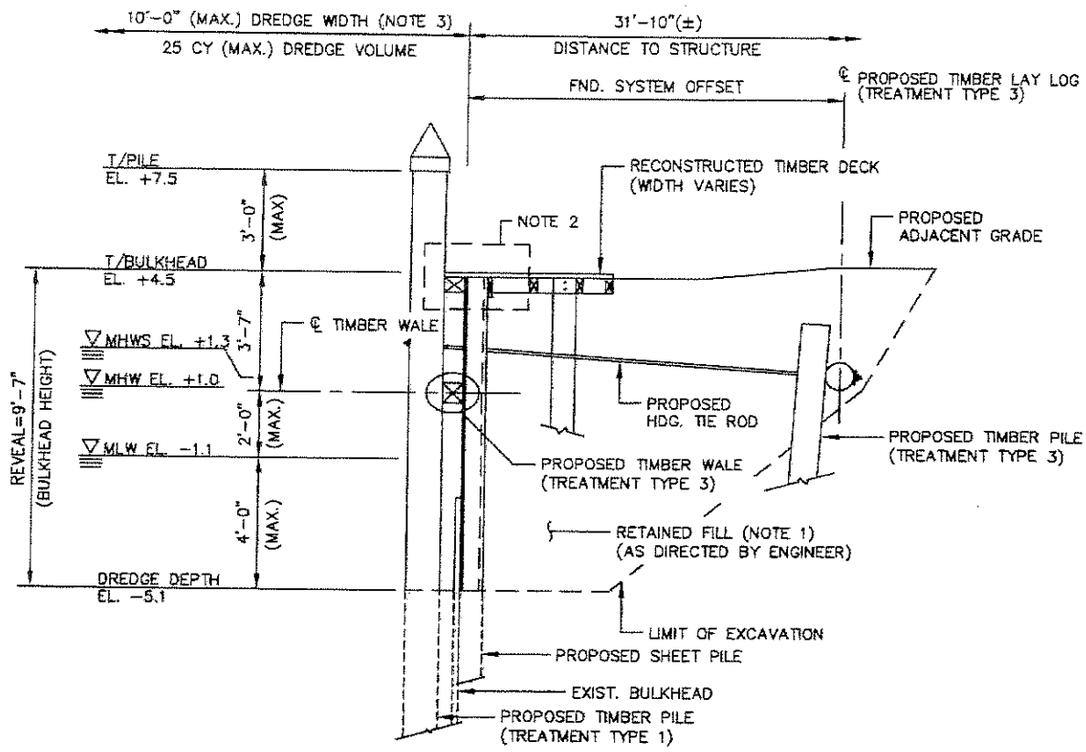

TYP SECTION
SCALE: 1"=5'-0"

4 of 6

NOTE: GANGWAY AND FLOATING DOCK NOT SHOWN FOR CLARITY. SEE SK-3.1 FOR ADDITIONAL INFORMATION.

1-2824-03320/00001
3/1/2019 MAA

ALL ELEVATIONS IN NAVD 88

SHEET NO.	PROJECT NO.	PROJECT	SCALE	
SK-3	P181214.00	WATERFRONT IMPROVEMENT PREPARED FOR MR. DONALD SIGNORELLI LOCATED AT 101 WEST SHORE DRIVE	1"=5'-0"	Rising Tide | Waterfront Solutions
3 OF 7 SHEET(S)	DRAWN BY JWK		DATE 02/07/19	486 SUNRISE HIGHWAY, SUITE 102 ROCKVILLE CENTRE, NEW YORK 11570
	CHECKED BY AMA	MASSAPEQUA, NY UNQUA RIVER NASSAU COUNTY	REVISION NO. B	SHEET BULKHEAD SECTION & DETAILS

FOR REGULATORY PERMIT
NOT FOR CONSTRUCTION

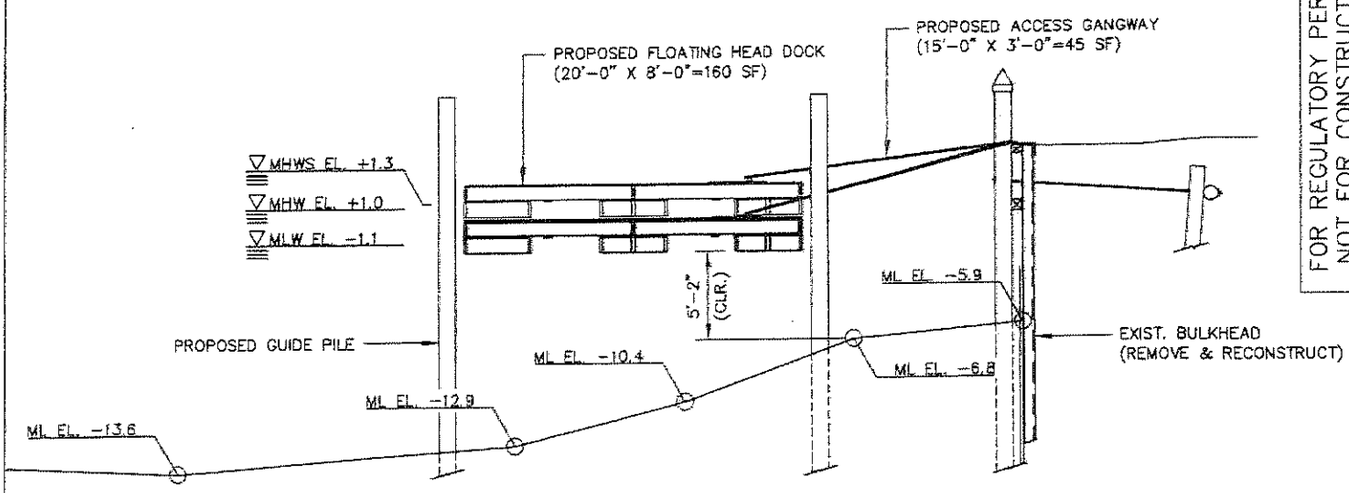

A
SK-2

ELEVATION
FLOATING DOCK

SCALE: 1"=10'-0"

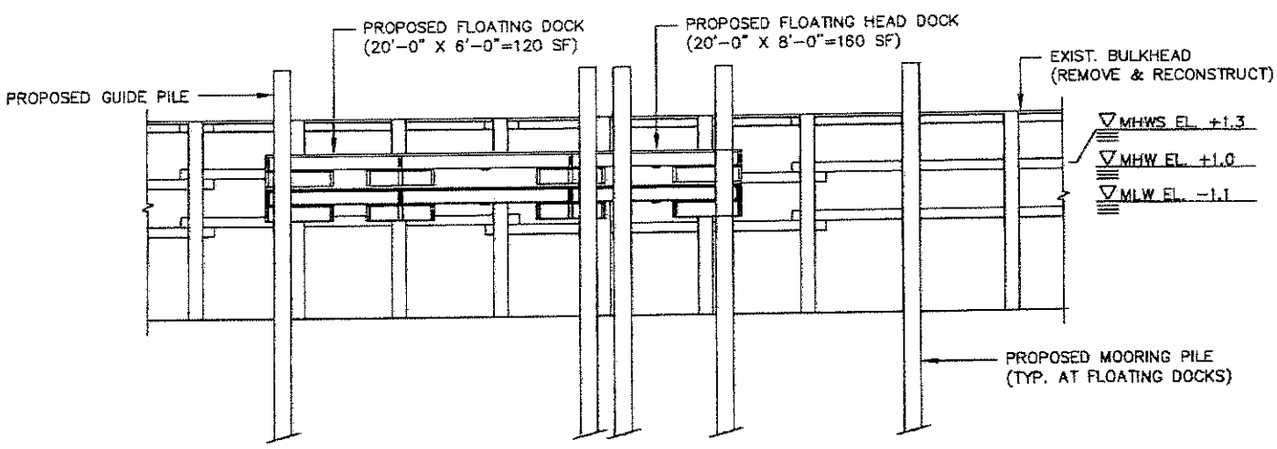

5 of 6

B
SK-2

ELEVATION
FLOATING DOCK

SCALE: 1"=10'-0"

1-2824-03320/00001
3/1/2019 MRP

SHEET NO.	PROJECT NO.	PROJECT	SCALE	
SK-3.1	P181214.00	WATERFRONT IMPROVEMENT PREPARED FOR MR. DONALD SIGNORELLI LOCATED AT 101 WEST SHORE DRIVE	1"=10'-0"	Rising Tide | Waterfront Solutions
4 OF 7 SHEET(S)	DRAWN BY JMK		DATE 02/07/19	486 SUNRISE HIGHWAY, SUITE 102 ROCKVILLE CENTRE, NEW YORK 11570
	CHECKED BY AMA	MASSAPEQUA, NY UNQUA RIVER NASSAU COUNTY	REVISION NO. B	SHEET FLOATING DOCK DETAILS

1 9 0 3 0 3 3

FOR REGULATORY PERMIT
NOT FOR CONSTRUCTION

6 of 6

1-2824-03320/00001
3/1/2019 MRP

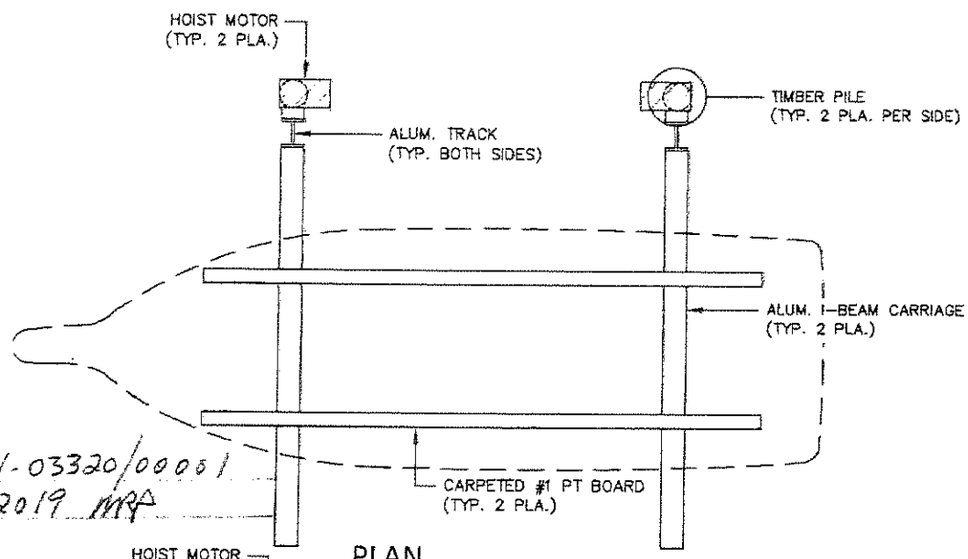

PLAN
BOAT LIFT

SCALE: 1"=5'-0"

NOTE:
PILES TO BE PLACED ON ANGLE
AS REQUIRED BY LIFT MANUFACTURER

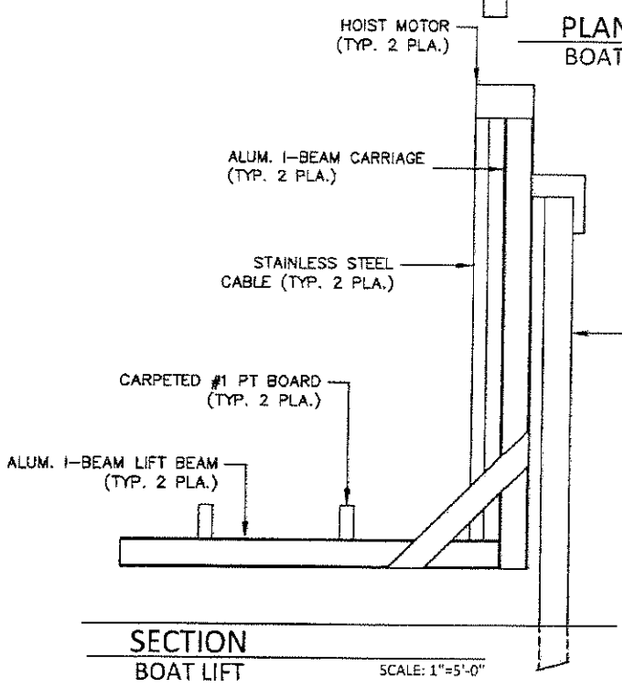

SECTION
BOAT LIFT

SCALE: 1"=5'-0"

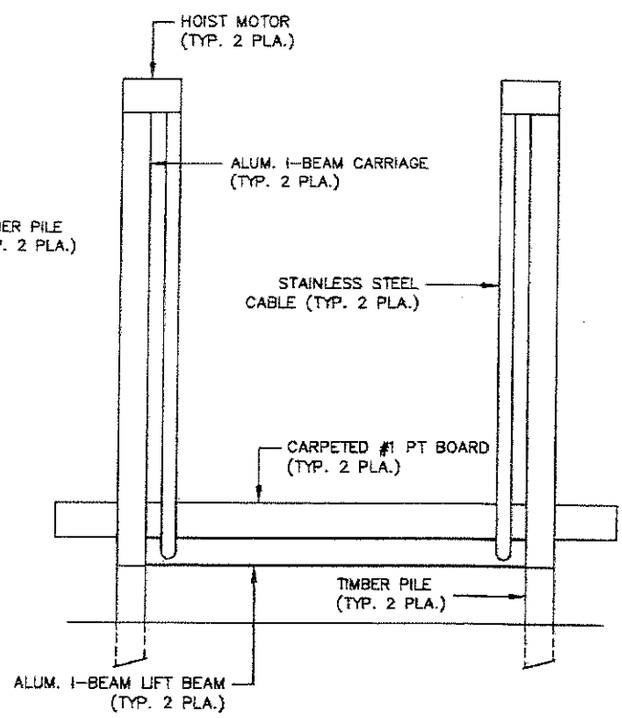

ELEVATION
BOAT LIFT

SCALE: 1"=5'-0"

LIFT SPECS & REQUIREMENTS					
LIFT CAPACITY	ALUM. TRACKS	ALUM. CARRIAGE & ARMS	GALV. TRACKS	GALV. CARRIAGE & ARMS	CARPETED #1 PT BOARDS
4,000 LBS	7" I-BEAM	7" I-BEAM	6" WF-BEAM	6" WF-BEAM	3" X 10" X 12'
8,000 LBS	8" I-BEAM	8" I-BEAM	6" WF-BEAM	8" WF-BEAM	3" X 10" X 12'
12,000 LBS	9" I-BEAM	9" I-BEAM	6" WF-BEAM	10" WF-BEAM	3" X 12" X 12'
14,000 LBS	10" I-BEAM	10" I-BEAM	6" WF-BEAM	10" WF-BEAM	3" X 12" X 14'
16,000 LBS	10" I-BEAM	10" I-BEAM	8" WF-BEAM	12" WF-BEAM	3" X 12" X 16'

SHEET NO. SK-4 5 OF 7 SHEET(S)	PROJECT NO. P181214.00	PROJECT WATERFRONT IMPROVEMENT PREPARED FOR MR. DONALD SIGNORELLI LOCATED AT 101 WEST SHORE DRIVE MASSAPEQUA, NY UNQUA RIVER NASSAU COUNTY	SCALE 1"=5'-0"	Rising Tide | Waterfront Solutions
	DRAWN BY JMK		DATE 02/07/19	486 SUNRISE HIGHWAY, SUITE 102 ROCKVILLE CENTRE, NEW YORK 11570
	CHECKED BY AMA		REVISION NO. 8	SHEET BOATLIFT SECTION & DETAILS

PUBLIC NOTICE

US Army Corps
of Engineers

New York District
Jacob K. Javits Federal Building
New York, N.Y. 10278-0090
ATTN: Regulatory Branch

Nationwide Permits
Issue Date: January 9, 2017

PUBLIC NOTICE FOR FEDERAL REGISTER NOTICE ANNOUNCING THE REISSUANCE OF THE NATIONWIDE PERMITS

On January 6, 2017, the U.S. Army Corps of Engineers (Corps) published the notice in the *Federal Register* announcing the reissuance of all 50 existing nationwide permits (NWPs), general conditions, and definitions with some modifications. The Corps also issued two new NWPs, one new general condition, and five new definitions. The 2017 NWPs will go into effect on March 19, 2017, and will expire on March 18, 2022.

With the publication of this *Federal Register* notice, Corps districts will begin finalizing their regional conditions for the new and reissued NWPs. Regional conditions will provide additional protection for the aquatic environment, and will help ensure that the NWPs authorize only those activities with no more than minimal adverse environmental effects. Regional conditions will help ensure protection of high value waters within the New York District.

The publication of this *Federal Register* notice also begins the 60-day period for states, Tribes, and the Environmental Protection Agency (EPA) to complete their water quality certification (WQC) processes for the NWPs. The 60-day period for WQC will end on March 6, 2017. This *Federal Register* notice also begins the 90-day period for coastal states to complete their Coastal Zone Management Act (CZMA) consistency determination processes. The 90-day period for CZMA consistency determinations will end on April 5, 2017.

If coastal states do not complete their CZMA consistency determination processes before the 2017 NWPs go into effect on March 19, 2017, the use of an NWP to authorize an activity within, or outside, a state's coastal zone that will affect land or water uses or natural resources of that state's coastal zone, is contingent upon obtaining an individual CZMA consistency determination, or a case-specific presumption of CZMA concurrence.

The January 6, 2017, *Federal Register* notice is available for viewing at the New York District office or on the Internet at http://www.usace.army.mil/Missions/CivilWorks/RegulatoryProgramandPermits/NationwidePermits.aspx . As an alternative, interested parties can access the January 6, 2017, final rule that was published in the *Federal Register* through the U.S. Government Printing Office at http://www.gpo.gov/fdsys/browse/collection.action?collectionCode=FR .

The Corps has also issued final decision documents for the new and reissued NWPs. These documents are available at www.regulations.gov at docket number COE-2015-0017. Furthermore, the national NWP decision documents will be supplemented by Division Engineers to address decisions concerning the addition of regional conditions to the NWPs.

Stephan A. Ryba
Chief, Regulatory Branch
New York District

Index of Nationwide Permits, Conditions, District Engineer's Decision, Further Information, and Definitions

Nationwide Permits

1. Aids to Navigation
2. Structures in Artificial Canals
3. Maintenance
4. Fish and Wildlife Harvesting, Enhancement, and Attraction Devices and Activities
5. Scientific Measurement Devices
6. Survey Activities
7. Outfall Structures and Associated Intake Structures
8. Oil and Gas Structures on the Outer Continental Shelf
9. Structures in Fleeting and Anchorage Areas
10. Mooring Buoys
11. Temporary Recreational Structures
12. Utility Line Activities
13. Bank Stabilization
14. Linear Transportation Projects
15. U.S. Coast Guard Approved Bridges
16. Return Water From Upland Contained Disposal Areas
17. Hydropower Projects
18. Minor Discharges
19. Minor Dredging
20. Response Operations for Oil or Hazardous Substances
21. Surface Coal Mining Activities
22. Removal of Vessels
23. Approved Categorical Exclusions
24. Indian Tribe or State Administered Section 404 Programs
25. Structural Discharges
26. [*Reserved*]
27. Aquatic Habitat Restoration, Establishment, and Enhancement Activities
28. Modifications of Existing Marinas
29. Residential Developments
30. Moist Soil Management for Wildlife
31. Maintenance of Existing Flood Control Facilities
32. Completed Enforcement Actions

33. Temporary Construction, Access, and Dewatering
34. Cranberry Production Activities
35. Maintenance Dredging of Existing Basins
36. Boat Ramps
37. Emergency Watershed Protection and Rehabilitation
38. Cleanup of Hazardous and Toxic Waste
39. Commercial and Institutional Developments
40. Agricultural Activities
41. Reshaping Existing Drainage Ditches
42. Recreational Facilities
43. Stormwater Management Facilities
44. Mining Activities
45. Repair of Uplands Damaged by Discrete Events
46. Discharges in Ditches
47. [*Reserved*]
48. Commercial Shellfish Aquaculture Activities
49. Coal Remining Activities
50. Underground Coal Mining Activities
51. Land-Based Renewable Energy Generation Facilities
52. Water-Based Renewable Energy Generation Pilot Projects
53. Removal of Low-Head Dams
54. Living Shorelines

General Conditions

1. Navigation
2. Aquatic Life Movements
3. Spawning Areas
4. Migratory Bird Breeding Areas
5. Shellfish Beds
6. Suitable Material
7. Water Supply Intakes
8. Adverse Effects from Impoundments
9. Management of Water Flows
10. Fills Within 100-Year Floodplains
11. Equipment
12. Soil Erosion and Sediment Controls
13. Removal of Temporary Fills
14. Proper Maintenance
15. Single and Complete Project
16. Wild and Scenic Rivers
17. Tribal Rights
18. Endangered Species
19. Migratory Bird and Bald and Golden Eagle Permits
20. Historic Properties
21. Discovery of Previously Unknown Remains and Artifacts
22. Designated Critical Resource Waters
23. Mitigation
24. Safety of Impoundment Structures
25. Water Quality
26. Coastal Zone Management
27. Regional and Case-by-Case Conditions
28. Use of Multiple Nationwide Permits

29. Transfer of Nationwide Permit Verifications
30. Compliance Certification
31. Activities Affecting Structures or Works Built by the United States
32. Pre-Construction Notification

District Engineer's Decision

Further Information

Definitions

Best management practices (BMPs)
Compensatory mitigation
Currently serviceable
Direct effects
Discharge
Ecological reference
Enhancement
Ephemeral stream
Establishment (creation)
High Tide Line
Historic property
Independent utility
Indirect effects
Intermittent stream
Loss of waters of the United States
Navigable waters
Non-tidal wetland
Open water
Ordinary high water mark
Perennial stream
Practicable
Pre-construction notification
Preservation
Protected tribal resources
Re-establishment
Rehabilitation
Restoration
Riffle and pool complex
Riparian areas
Shellfish seeding
Single and complete linear project
Single and complete non-linear project
Stormwater management
Stormwater management facilities
Stream bed
Stream channelization
Structure
Tidal wetland
Tribal lands
Tribal rights
Vegetated shallows
Waterbody

Single and complete non-linear project
Stormwater management
Stormwater management facilities
Stream bed
Stream channelization
Structure
Tidal wetland
Tribal lands
Tribal rights
Vegetated shallows
Waterbody

B. Nationwide Permits

1. Aids to Navigation. The placement of aids to navigation and regulatory markers that are approved by and installed in accordance with the requirements of the U.S. Coast Guard (see 33 CFR, chapter I, subchapter C, part 66). (Authority: Section 10 of the Rivers and Harbors Act of 1899 (Section 10))

2. Structures in Artificial Canals. Structures constructed in artificial canals within principally residential developments where the connection of the canal to a navigable water of the United States has been previously authorized (see 33 CFR 322.5(g)). (Authority: Section 10)

3. Maintenance. (a) The repair, rehabilitation, or replacement of any previously authorized, currently serviceable structure or fill, or of any currently serviceable structure or fill authorized by 33 CFR 330.3, provided that the structure or fill is not to be put to uses differing from those uses specified or contemplated for it in the original permit or the most recently authorized modification. Minor deviations in the structure's configuration or filled area, including those due to changes in materials, construction techniques, requirements of other regulatory agencies, or current construction codes or safety standards that are necessary to make the repair, rehabilitation, or replacement are authorized. This NWP also authorizes the removal of previously authorized structures or fills. Any stream channel modification is limited to the minimum necessary for the repair, rehabilitation, or replacement of the structure or fill; such modifications, including the removal of material from the stream channel, must be immediately adjacent to the project. This NWP also authorizes the removal of accumulated sediment and debris within, and in the immediate vicinity of, the structure or fill. This NWP also authorizes the repair, rehabilitation, or replacement of those structures or fills destroyed or damaged by storms, floods, fire or other discrete events, provided the repair, rehabilitation, or replacement is commenced, or is under contract to commence, within two years of the date of their destruction or damage. In cases of catastrophic events, such as hurricanes or tornadoes, this two-year limit may be waived by the district engineer, provided the permittee can demonstrate funding, contract, or other similar delays.

(b) This NWP also authorizes the removal of accumulated sediments and debris outside the immediate vicinity of existing structures (e.g., bridges, culverted road crossings, water intake structures, etc.). The removal of sediment is limited to the minimum necessary to restore the waterway in the vicinity of the structure to the approximate dimensions that existed when the structure was built, but cannot extend farther than 200 feet in any direction from the structure. This 200 foot limit does not apply to maintenance dredging to remove accumulated sediments blocking or restricting outfall and intake structures or to maintenance dredging to remove accumulated sediments from canals associated with outfall and intake structures. All dredged or excavated materials must be deposited and retained in an area that has no waters of the United States unless otherwise specifically approved by the district engineer under separate authorization.

(c) This NWP also authorizes temporary structures, fills, and work, including the use of temporary mats, necessary to conduct the maintenance activity. Appropriate measures must be taken to maintain normal downstream flows and minimize flooding to the maximum extent practicable, when temporary structures, work, and discharges, including cofferdams, are necessary for construction activities, access fills, or dewatering of construction sites. Temporary fills must consist of materials, and be placed in a manner, that will not be eroded by expected high flows. After conducting the maintenance activity, temporary fills must be removed in their entirety and the affected areas returned to pre-construction elevations. The areas affected by temporary fills must be revegetated, as appropriate.

(d) This NWP does not authorize maintenance dredging for the primary purpose of navigation. This NWP does not authorize beach restoration. This NWP does not authorize new stream channelization or stream relocation projects.

Notification: For activities authorized by paragraph (b) of this NWP, the permittee must submit a pre-construction notification to the district engineer prior to commencing the activity (see general condition 32). The pre-construction notification must include information regarding the original design capacities and configurations of the outfalls, intakes, small impoundments, and canals. (Authorities: Section 10 of the Rivers and Harbors Act of 1899 and section 404 of the Clean Water Act (Sections 10 and 404))

Note: This NWP authorizes the repair, rehabilitation, or replacement of any previously authorized structure or fill that does not qualify for the Clean Water Act section 404(f) exemption for maintenance.

4. Fish and Wildlife Harvesting, Enhancement, and Attraction Devices and Activities. Fish and wildlife harvesting devices and activities such as pound nets, crab traps, crab dredging, eel pots, lobster traps, duck blinds, and clam and oyster digging, fish aggregating devices, and small fish attraction devices such as open water fish concentrators (sea kites, etc.). This NWP does not authorize artificial reefs or impoundments and semi-impoundments of waters of the United States for the culture or

Notification: The permittee must submit a pre-construction notification to the district engineer prior to commencing the activity if: (1) the discharge or the volume of area excavated exceeds 10 cubic yards below the plane of the ordinary high water mark or the high tide line, or (2) the discharge is in a special aquatic site, including wetlands. (See general condition 32.) (Authorities: Sections 10 and 404)

19. Minor Dredging. Dredging of no more than 25 cubic yards below the plane of the ordinary high water mark or the mean high water mark from navigable waters of the United States (i.e., section 10 waters). This NWP does not authorize the dredging or degradation through siltation of coral reefs, sites that support submerged aquatic vegetation (including sites where submerged aquatic vegetation is documented to exist but may not be present in a given year), anadromous fish spawning areas, or wetlands, or the connection of canals or other artificial waterways to navigable waters of the United States (see 33 CFR 322.5(g)). All dredged material must be deposited and retained in an area that has no waters of the United States unless otherwise specifically approved by the district engineer under separate authorization. (Authorities: Sections 10 and 404)

20. Response Operations for Oil or Hazardous Substances. Activities conducted in response to a discharge or release of oil or hazardous substances that are subject to the National Oil and Hazardous Substances Pollution Contingency Plan (40 CFR part 300) including containment, cleanup, and mitigation efforts, provided that the activities are done under either: (1) the Spill Control and Countermeasure Plan required by 40 CFR 112.3; (2) the direction or oversight of the federal on-scene coordinator designated by 40 CFR part 300; or (3) any approved existing state, regional or local contingency plan provided that the Regional Response Team (if one exists in the area) concurs with the proposed response efforts. This NWP also authorizes activities required for the cleanup of oil releases in waters of the United States from electrical equipment that are governed by EPA's polychlorinated biphenyl spill response regulations at 40 CFR part 761. This NWP also authorizes the use of temporary structures and fills in waters of the U.S. for spill response training exercises. (Authorities: Sections 10 and 404)

21. Surface Coal Mining Activities. Discharges of dredged or fill material into waters of the United States associated with surface coal mining and reclamation operations, provided the following criteria are met:

(a) The activities are already authorized, or are currently being processed by states with approved programs under Title V of the Surface Mining Control and Reclamation Act of 1977 or as part of an integrated permit processing procedure by the Department of the Interior, Office of Surface Mining Reclamation and Enforcement;

(b) The discharge must not cause the loss of greater than 1/2-acre of non-tidal waters of the United States. The discharge must not cause the loss of more than 300 linear feet of stream bed, unless for intermittent and ephemeral stream beds the district engineer waives the 300 linear foot limit by making a written determination concluding that the discharge will result in no more than minimal individual and cumulative adverse environmental effects. The loss of stream bed plus any other losses of jurisdictional

19030 - 2

ACORD®

CERTIFICATE OF LIABILITY INSURANCE

DATE (MM/DD/YYYY) 08/23/2018

THIS CERTIFICATE IS ISSUED AS A MATTER OF INFORMATION ONLY AND CONFERS NO RIGHTS UPON THE CERTIFICATE HOLDER. THIS CERTIFICATE DOES NOT AFFIRMATIVELY OR NEGATIVELY AMEND, EXTEND OR ALTER THE COVERAGE AFFORDED BY THE POLICIES BELOW. THIS CERTIFICATE OF INSURANCE DOES NOT CONSTITUTE A CONTRACT BETWEEN THE ISSUING INSURER(S), AUTHORIZED REPRESENTATIVE OR PRODUCER, AND THE CERTIFICATE HOLDER.

IMPORTANT: If the certificate holder is an ADDITIONAL INSURED, the policy(ies) must be endorsed. If SUBROGATION IS WAIVED, subject to the terms and conditions of the policy, certain policies may require an endorsement. A statement on this certificate does not confer rights to the certificate holder in lieu of such endorsement(s).

PRODUCER
Twin Forks Insurance Agency
16 Station Road, Suite 7
Bellport, NY 11713

CONTACT NAME:
PHONE (A/C, No, Ext): 631-224-1000 FAX (A/C, No): 631-224-1800
E-MAIL ADDRESS:

INSURER(S) AFFORDING COVERAGE	NAIC #
INSURER A : Atlantic Specialty Ins. Co.	
INSURER B :	
INSURER C :	
INSURER D :	
INSURER E :	
INSURER F :	

INSURED
Kevel Marine Contractors Inc.
327 Sunset Blvd.
Massapequa, NY 11758

COVERAGES **CERTIFICATE NUMBER:** **REVISION NUMBER:**

THIS IS TO CERTIFY THAT THE POLICIES OF INSURANCE LISTED BELOW HAVE BEEN ISSUED TO THE INSURED NAMED ABOVE FOR THE POLICY PERIOD INDICATED. NOTWITHSTANDING ANY REQUIREMENT, TERM OR CONDITION OF ANY CONTRACT OR OTHER DOCUMENT WITH RESPECT TO WHICH THIS CERTIFICATE MAY BE ISSUED OR MAY PERTAIN, THE INSURANCE AFFORDED BY THE POLICIES DESCRIBED HEREIN IS SUBJECT TO ALL THE TERMS, EXCLUSIONS AND CONDITIONS OF SUCH POLICIES. LIMITS SHOWN MAY HAVE BEEN REDUCED BY PAID CLAIMS.

INSR LTR	TYPE OF INSURANCE	ADDL INSR	SUBR WVD	POLICY NUMBER	POLICY EFF (MM/DD/YYYY)	POLICY EXP (MM/DD/YYYY)	LIMITS	
A	GENERAL LIABILITY ✓ COMMERCIAL GENERAL LIABILITY CLAIMS-MADE ✓ OCCUR GEN'L AGGREGATE LIMIT APPLIES PER: ✓ POLICY PRO-JECT LOC			B5JH00169	05/17/18	05/17/19	EACH OCCURRENCE	$ 1,000,000
							DAMAGE TO RENTED PREMISES (Ea occurrence)	$ 50,000
							MED EXP (Any one person)	$ 5,000
							PERSONAL & ADV INJURY	$ 1,000,000
							GENERAL AGGREGATE	$ 2,000,000
							PRODUCTS - COMP/OP AGG	$ 1,000,000
								$
	AUTOMOBILE LIABILITY ANY AUTO ALL OWNED AUTOS SCHEDULED AUTOS HIRED AUTOS NON-OWNED AUTOS						COMBINED SINGLE LIMIT (Ea accident)	$
							BODILY INJURY (Per person)	$
							BODILY INJURY (Per accident)	$
							PROPERTY DAMAGE (Per accident)	$
								$
	UMBRELLA LIAB OCCUR EXCESS LIAB CLAIMS-MADE DED RETENTION $						EACH OCCURRENCE	$
							AGGREGATE	$
								$
	WORKERS COMPENSATION AND EMPLOYERS' LIABILITY ANY PROPRIETOR/PARTNER/EXECUTIVE OFFICER/MEMBER EXCLUDED? Y / N (Mandatory in NH) If yes, describe under DESCRIPTION OF OPERATIONS below	N / A					WC STATU-TORY LIMITS / OTH-ER	
							E.L. EACH ACCIDENT	$
							E.L. DISEASE - EA EMPLOYEE	$
							E.L. DISEASE - POLICY LIMIT	$

DESCRIPTION OF OPERATIONS / LOCATIONS / VEHICLES (Attach ACORD 101, Additional Remarks Schedule, if more space is required)

CERTIFICATE HOLDER

Town of Oyster Bay
74 Audrey Avenue
Oyster Bay, NY 11771

CANCELLATION

SHOULD ANY OF THE ABOVE DESCRIBED POLICIES BE CANCELLED BEFORE THE EXPIRATION DATE THEREOF, NOTICE WILL BE DELIVERED IN ACCORDANCE WITH THE POLICY PROVISIONS.

AUTHORIZED REPRESENTATIVE

1903043

New York State Insurance Fund

Workers' Compensation & Disability Benefits Specialists Since 1914

8 CORPORATE CENTER DR, 2ND FLR, MELVILLE, NEW YORK 11747-3166

CERTIFICATE OF WORKERS' COMPENSATION INSURANCE

^^^^^ 113444519
KEVEL MARINE CONTRACTORS INC
P O BOX 62
MASSAPEQUA PARK NY 11762

SCAN TO VALIDATE
AND SUBSCRIBE

POLICYHOLDER	CERTIFICATE HOLDER
KEVEL MARINE CONTRACTORS INC P O BOX 62 MASSAPEQUA PARK NY 11762	TOWN OF OYSTER BAY DIVISION OF BUILDING 74 AUDREY AVE OYSTER BAY NY 11771

POLICY NUMBER	CERTIFICATE NUMBER	POLICY PERIOD	DATE
H1429 206-4	946847	07/19/2018 TO 07/19/2019	8/23/2018

THIS IS TO CERTIFY THAT THE POLICYHOLDER NAMED ABOVE IS INSURED WITH THE NEW YORK STATE INSURANCE FUND UNDER POLICY NO. 1429 206-4, COVERING THE ENTIRE OBLIGATION OF THIS POLICYHOLDER FOR WORKERS' COMPENSATION UNDER THE NEW YORK WORKERS' COMPENSATION LAW WITH RESPECT TO ALL OPERATIONS IN THE STATE OF NEW YORK, EXCEPT AS INDICATED BELOW, AND, WITH RESPECT TO OPERATIONS OUTSIDE OF NEW YORK, TO THE POLICYHOLDER'S REGULAR NEW YORK STATE EMPLOYEES ONLY.

IF YOU WISH TO RECEIVE NOTIFICATIONS REGARDING SAID POLICY, INCLUDING ANY NOTIFICATION OF CANCELLATIONS, OR TO VALIDATE THIS CERTIFICATE, VISIT OUR WEBSITE AT HTTPS://WWW.NYSIF.COM/CERT/CERTVAL.ASP. THE NEW YORK STATE INSURANCE FUND IS NOT LIABLE IN THE EVENT OF FAILURE TO GIVE SUCH NOTIFICATIONS.

THIS POLICY DOES NOT COVER CLAIMS OR SUITS THAT ARISE FROM BODILY INJURY SUFFERED BY THE OFFICERS OF THE INSURED CORPORATION.

MICHAEL JOHNSON - PRES
KEVEL MARINE CONTRACTORS INC
A ONE PERSON CORP

THIS CERTIFICATE IS ISSUED AS A MATTER OF INFORMATION ONLY AND CONFERS NO RIGHTS NOR INSURANCE COVERAGE UPON THE CERTIFICATE HOLDER. THIS CERTIFICATE DOES NOT AMEND, EXTEND OR ALTER THE COVERAGE AFFORDED BY THE POLICY.

NEW YORK STATE INSURANCE FUND

Sherwin Taylor

DIRECTOR,INSURANCE FUND UNDERWRITING

VALIDATION NUMBER: 726172553

DEPARTMENT OF THE ARMY
U.S. ARMY CORPS OF ENGINEERS, NEW YORK DISTRICT
JACOB K. JAVITS FEDERAL BUILDING
26 FEDERAL PLAZA
NEW YORK NEW YORK 10278-0090

REGULATORY BRANCH

SEP 0 6 2019

SUBJECT: Letter of Coordination for Department of the Army Permit Application Number NAN-2019-00070-EBR by Signorelli, Donald

The New York District, U.S. Army Corps of Engineers, has received a request for Department of the Army authorization for the following activity:

APPLICANT: Donald Signorelli
101 West Shore Road
Massapequa, NY 11758

ACTIVITY: From west to east the construction of a 14-foot-wide by 16-foot-long boat lift and a ramp and "L"-shaped float assembly consisting of an approximately 3-foot-wide by 15-foot-long ramp leading to an 8-foot-wide by 20-foot-long float and a 6-foot-wide by 20-foot-long float extending parallel to the bulkhead.

The proposed ramp and float assembly will extend approximately 30 linear feet into the waterway from the plane of Mean Low Water.

Under the authorization of Nationwide Permit 3, MAINTENANCE: The removal and in-place replacement of an existing approximately 108-linear-foot bulkhead, with two (2) new 6-foot-long returns up to 18 inches higher than existing.

Under the authorization of Nationwide Permit 19, MINOR DREDGING: One-time maintenance dredging of approximately 25 cubic yards of material to a depth of four (4) feet below the plane of Mean Low Water immediately seaward of the bulkhead over an approximate area of 410 square feet to be placed as backfill behind the bulkhead

WATERWAY: Unqua River, a tributary of South Oyster Bay

LOCATION: Massapequa, Town of Oyster Bay, Nassau County, New York

As this is minor in nature, authorization may be by Letter of Permission. This is in accordance with current Federal Regulations governing work in navigable waters of the United States. To accomplish the coordination required, prior to the issuance of a Letter of Permission, your review of the enclosed drawings is requested.

Pursuant to Section 307 (c) of the Coastal Zone Management Act of 1972 as amended (16 U.S.C. 1465 (c)(3)(A)), the applicant has certified that the activity complies with and will be conducted in a manner that is consistent with the approved state coastal zone management program.

SEP 0 6 2019

In order for us to better serve you, please complete our Customer Service Survey located at http://www.nan.usace.army.mil/Missions/Regulatory/CustomerSurvey.aspx.

To allow for the timely processing of the subject application, your comments are requested within 20 days of the date of this letter. If you have any questions, please contact William T. Bruno, of my staff, at (917) 790-8516.

Sincerely,

Ronald R. Pinzon
Chief, Eastern Section

Enclosures

MAILING LABELS

Donald Signorelli
101 West Shore Road
Massapequa, NY 11758

Reviewed By
Office of Town Attorney

WHEREAS, Maureen A. Fitzgerald, Commissioner, Department of Community and Youth Services, by memorandum dated October 31, 2019, requested Town Board approval to employ the services of the performers in the table attached to, and made a part of, said memorandum, for the 2020 Distinguished Artists Concert Series, for the dates and at the various libraries indicated; and

WHEREAS, the Town and the host library will each pay $350 for each performance, for a total not to exceed $6,650.00 for the 2020 portion of the Concert Series; and

WHEREAS, funds for these fees are available in Account CYS A 7020 47660 000 0000;

NOW, THEREFORE, BE IT RESOLVED, that the Town Board hereby approves the request as hereinabove set forth to employ the services of the performers, for the dates, locations and fees as stated in said memorandum and the attached list; and be it further

RESOLVED, that the Comptroller is hereby authorized and directed to make payment for each performer at a fee of $350.00, upon presentation of a duly certified claim, after audit, with funds for said payment to be drawn from Account No. CYS A 7020 47660 000 0000.

-#-

The foregoing resolution was declared adopted after a poll of the members of the Board; the vote being recorded as follows:

Supervisor Saladino	Aye
Councilman Muscarella	Aye
Councilman Macagnone	Aye
Councilwoman Johnson	Aye
Councilman Imbroto	Aye
Councilman Hand	Aye
Councilman Labriola	Aye

4

TOWN OF OYSTER BAY

Inter-Departmental Memorandum

October 31, 2019

TO: Memorandum Docket

FROM: Maureen A. Fitzgerald, Commissioner
Department of Community and Youth Services

SUBJECT: 2019-2020 Distinguished Artists Concert Series

The Department of Community & Youth Services is requesting Town Board authorization to employ the services of the following performers for the dates and locations in accordance with the attached table. This program is co-sponsored by the libraries noted.

Both the Town and the individual library will each pay $350 toward the noted performance. The Town's responsibility will not exceed $6,650.00 for the 2020 portion of the Concert Series.

In accordance with Guideline 5, Section b. of the Town Procurement Policy, the procurement of these musicians and artists is exempt from the solicitation, written proposal or quotation requirements of the policy.

Funds for these fees will be available in Account CYS A 7020 47660 000 0000, Special Events.

Therefore, it is respectfully requested that the Town Board authorize the Town to enter into agreements as negotiated and approved by the Town Attorney's Office and further authorize the Supervisor and/or his designee or the Commissioner of Community and Youth Services to execute said agreements.

Maureen A. Fitzgerald
Maureen A. Fitzgerald
Commissioner

MAF:dj
Attachments
cc: Town Attorney (Original +9 copies)

PERFORMER NAME	CHECK PAYABLE TO:	DATE/TIME OF PERFORMANCE	LOCATION OF PERFORMANCE
Sheri Miller	Sheri Miller [redacted]	Sunday, January 5, 2020 2:00 PM	Hicksville Public Library
Bay Big Band	William Joseph [redacted]	Sunday, January 12, 2020 2:30 PM	Farmingdale Public Library
Just Sixties	Barbara Weinstein [redacted]	Sunday, January 19, 2020 1:00 PM	Massapequa Public Library
The History of Rock & Roll	MJB Administrative Services [redacted]	Sunday, January 26, 2020 2:00 PM	Hicksville Public Library
Broken Reed Sax Quartet	Charles D. Gerard [redacted]	Sunday, February 2, 2020 2:00 PM	Locust Valley Library
Simply Diamond	Simply Diamond Music, LLC [redacted]	Sunday, February 9, 2020 2:00 PM	Locust Valley Library
Boston Burglars	Brendan Corey [redacted]	Sunday, February 16, 2020 1:00 PM	Massapequa Public Library
Ricardo Rosa & Friends	Inna Leytush [redacted]	Sunday, February 23, 2020 2:00 PM	Jericho Public Library
Napoleon Revels-Bey	Revels-Bey Music [redacted]	Sunday, March 8, 2020 2:00 PM	Locust Valley Library
The Golden Chords	David Alterman [redacted]	Sunday, March 15, 2020 2:00 PM	Jericho Public Library
Lee Glantz	Lee Glantz [redacted]	Sunday, March 22, 2020 1:00 PM	Syosset Public Library
The Chamlins – Cabaret Couple	Rochelle Chamlin [redacted]	Sunday, March 29, 2020 2:00 PM	Hicksville Public Library
Echoes of Sinatra	Steven Kazlauskas [redacted]	Saturday, April 4, 2020 7:30 PM	Syosset Public Library
Art Lillard's Heavenly Big Band	Art Lillard [redacted]	Sunday, April 5, 2020 2:00 PM	Bethpage Public Library
Emily & Vincent Ricciardi	E & V Entertainment [redacted]	Saturday, April 18, 2020 8:00 PM	Plainview-Old Bethpage Public Library
Metro Music with John Walters	Walter Lazauskas d/b/a John Walters [redacted]	Sunday, April 19, 2020 2:30 PM	Farmingdale Public Library
The Precisions	Fast Track Professional Services, Corp. [redacted]	Sunday, May 3, 2020 2:30 PM	Farmingdale Public Library
Harvey Granat & Cheryl Segall	Cheryl Segall [redacted]	Sunday, May 17, 2020 2:00 PM	Locust Valley Library
Penny Lane	James DiNapoli [redacted]	Sunday, May 31, 2020 1:00 PM	Syosset Public Library

Contract number: 003-2020

Contract

This Contract, made by and between the Town of Oyster Bay's Department of Community and Youth Services, located at 977 Hicksville Road, Massapequa, New York 11758 (hereinafter referred to as "TOWN") and XXX, located at XXXX, XXX, (hereinafter referred to as "CONTRACTOR") in consideration of mutual interests provided for hereby, the parties herein agree as follows:

Performance by:	XXXX
Date:	XXXX
Time:	XXX (a 75-90 minute performance is required)
Location:	XXX Public Library
Contact:	XXX
Amount:	$350.00

In consideration of these services, the TOWN agrees to pay CONTRACTOR the sum of Three hundred and fifty dollars. If CONTRACTOR fails to appear, or is incapacitated from rendering a performance through sickness or otherwise, CONTRACTOR shall not receive any compensation. Payment for the above services shall be made upon submission of CONTRACTOR's invoice and the claim form provided by TOWN.

XXX

_____
CONTRACTOR

DATE: _____, 2019

TOWN OF OYSTER BAY

_____
COMMISSIONER

DATE: _____, 2020

Reviewed By
Office of Town Attorney

Reviewed By
Office of Town Attorney
Elizabeth A. Faughnan

WHEREAS, by Resolution No. 72-2017, adopted February 14, 2017, the Town Board authorized and directed Super Sounds Entertainment, Inc., doing business as Brilliance Event Productions, 117B Newtown Road, Plainview, New York 11803, to provide professional lighting equipment to be used during the Music Under the Stars concerts and various other special events, pursuant to an Agreement, for the amount of $65,000 for the period beginning February 15, 2017 through December 31, 2017 with three (3) one (1) year extension options; and

WHEREAS, by Resolution No. 713-2017, adopted November 14, 2017, the Town Board authorized the Department of Community and Youth Services to enter into the first of three (3) one (1) year extensions, for the period January 1, 2018 through December 31, 2018; and

WHEREAS, by Resolution No. 775-2018, adopted December 11, 2018, the Town Board authorized the Department of Community and Youth Services to enter into the second of three (3) one (1) year extensions, for the period January 1, 2019 through December 31, 2019; and

WHEREAS, Maureen A. Fitzgerald, Commissioner, Department of Community and Youth Services, by memorandum dated October 31, 2019, requested Town Board authorization to exercise the third and final option to extend the Agreement for one year, from January 1, 2020 through December 31, 2020, in an amount not to exceed $65,000.00; and

WHEREAS, funds for the Agreement are available in Account CYS A 7020 47660 000 0000, Special Events;

NOW, THEREFORE, BE IT RESOLVED, that the recommendation as hereinabove set forth is hereby accepted and approved, and the Department of Community and Youth Services is hereby authorized on behalf of the Town to enter into a third and final one year extension of the Agreement with Super Sounds Entertainment, Inc., DBA Brilliance Event Productions, to provide professional lighting equipment to be used during the Music Under the Stars concerts and other special events for the period from January 1, 2020 through December 31, 2020, in an amount not to exceed $65,000.00; and be it further

RESOLVED, that Maureen A. Fitzgerald, Commissioner, Department of Community and Youth Services is hereby authorized to execute said extension; and be it further

RESOLVED, that the Comptroller is hereby authorized to make payment for same, in accordance with the applicable terms and provisions of said agreement, upon presentation of a duly certified claim, after audit; and be it further

RESOLVED, that the funds for said payment are to be drawn from Account No. CYS A 7020 47660 000 0000, Special Events.

-#-

The foregoing resolution was declared adopted after a poll of the members of the Board; the vote being recorded as follows:

Supervisor Saladino	Aye
Councilman Muscarella	Aye
Councilman Macagnone	Aye
Councilwoman Johnson	Aye
Councilman Imbroto	Aye
Councilman Hand	Aye
Councilman Labriola	Aye

5

TOWN OF OYSTER BAY
Inter-Departmental Memorandum

October 31, 2019

TO: Memorandum Docket

FROM: Maureen A. Fitzgerald, Commissioner
Department of Community and Youth Services

SUBJECT: Agreement with Super Sounds Entertainment, Incorporated
dba Brilliance Event Productions

The Department of Community and Youth Services is requesting Town Board authorization to enter into an Agreement with Super Sounds Entertainment, Incorporated DBA Brilliance Event Productions for professional lighting equipment and services used during the Music Under the Stars concerts and various other special events. Town Board Resolution No. 72-2017, dated February 14, 2017, authorized the Agreement for the period beginning February 15, 2017 through December 31, 2017 with an option to extend for three (3) additional years. Town Board Resolution No. 713-2017, dated November 14, 2017, provided authorization for the period beginning January 1, 2018 through December 31, 2018. Town Board Resolution No. 775-2018, dated December 11, 2018, provided authorization for January 1, 2019 through December 31, 2019.

If approved, the Agreement will be in an amount not to exceed $65,000.00 for the period beginning January 1, 2020 through December 31, 2020. This will be the last year of the optional three (3) one-year extensions.

The Department is in full compliance with Guideline 9 of the Town's Procurement Policy. A copy of the Agreement and Certification of Disclosure Form are attached. Funds for the Agreement will be available in Account CYS A 7020 47660 000 0000, *Special Events*.

Therefore, it is respectfully requested that the Town Board authorize the Town to enter into an agreement, as negotiated and approved by the Town Attorney's Office, and further authorize the Supervisor and/or his designee or the Commissioner of Community and Youth Services to execute said agreements

Maureen A. Fitzgerald
Maureen A. Fitzgerald
Commissioner

MAF:iw
Attachments
cc: Town Attorney (+9 copies)

Certification of Disclosure Form

Super Sounds Entertainment, Incorporated
D/B/A Brilliance Event Productions
117 Newtown Road
Plainview, NY 11803

[redacted]

☑ I certify that the information provided on the 2018 *Disclosure Questionnaire* has **NOT** changed.

☐ The information provided on the 2018 *Disclosure Questionnaire* has changed; therefore, I have attached a new, notarized *Disclosure Questionnaire*.

Bob Richards, Owner

9/23/19
Date

Meeting of February 14, 2017

Resolution No. 72-2017

WHEREAS, Maureen A. Fitzgerald, Commissioner of the Department of Community and Youth Services, by memorandum dated January 19, 2017, requested Town Board authorization to enter into an agreement with Super Sounds Entertainment, Incorporated, DBA Brilliance Event Productions for professional lighting equipment to be used during the Music Under the Stars concerts and various other special events. The Agreement would be for the amount of $65,000 for the period beginning February 15, 2017 through December 31, 2017 with three (3) one (1) year extension options; and

WHEREAS, a Request for Proposals was sent out on November 21, 2016 to seven (7) companies that provide these services. One timely response was received from Super Sounds Entertainment, Incorporated, DBA Brillance Event Productions, 117B Newtown Road, Plainview, New York 11803; and

WHEREAS, in accordance with both the Procurement Policy and the criteria set forth in the Request for Proposals, the Department of Community and Youth Services selected Super Sounds Entertainment, Incorporated, DBA Brilliance Event Productions,

NOW, THEREFORE, BE IT RESOLVED, That the recommendation as hereinabove set forth is hereby accepted and approved, and the Department of Community and Youth Services, is hereby authorized to enter into an agreement on behalf of the Town with Super Sounds Entertainment, Incorporated, DBA Brilliance Event Productions, in an amount not to exceed $65,000, to provide professional lighting equipment to be used during the Music Under the Stars concerts and other special events for the period beginning February 15, 2017 through December 31, 2017 with three (3) one (1) year extension options; and be it further

RESOLVED, that Maureen A. Fitzgerald, Commissioner of Community and Youth Services be authorized to execute said Agreement; and be it further

RESOLVED, that the Comptroller is hereby authorized to make payment for same, in accordance with the applicable terms and provisions of said agreement, upon presentation of a duly certified claim, after audit; and be it further

RESOLVED, That the funds for said payment are to be drawn from Account No. CYS A 7020 47660 000 0000.

-#-

Reviewed By
Office of Town Attorney

The foregoing resolution was declared adopted after a poll of the members of the Board; the vote being recorded as follows:

Supervisor Saladino	Aye
Councilman Muscarella	Aye
Councilman Macagnone	Nay
Councilman Coschignano	Aye
Councilman Pinto	Aye
Councilwoman Alesia	Aye
Councilwoman Johnson	Aye

cc: Supervisor
Town Attorney
Comptroller (2)
Community & Youth Services

Meeting of November 14, 2017 Resolution No. 713-2017

Reviewed By
Office of Town Attorney

WHEREAS, by Resolution 72-2017, adopted February 14, 2017, the Town Board authorized and directed Super Sounds Entertainment, Incorporated, DBA Brilliance Event Productions, 117B Newtown Road, Plainview, New York 11803, to provide professional lighting equipment to be used during the Music Under the Stars concerts and various other special events, pursuant to an Agreement for the amount of $65,000 for the period beginning February 15, 2017 through December 31, 2017 with three (3) one (1) year extension options; and

WHEREAS, Maureen A. Fitzgerald, Commissioner of the Department of Community and Youth Services, by memorandum dated October 19, 2017, requested Town Board authorization to exercise the option to extend the Agreement for one year, from January 1, 2018 through December 31, 2018, in an amount not to exceed $65,000.00; and

WHEREAS, funds for the Agreement are available in Account CYS A 7020 47660 000 0000;

NOW, THEREFORE, BE IT RESOLVED, that the recommendation as hereinabove set forth is hereby accepted and approved, and the Department of Community and Youth Services is hereby authorized on behalf of the Town to enter into a one year extension of the Agreement with Super Sounds Entertainment, Incorporated, DBA Brilliance Event Productions, to provide professional lighting equipment to be used during the Music Under the Stars concerts and other special events for the period from January 1, 2018 through December 31, 2018, in an amount not to exceed $65,000; and be it further

RESOLVED, that Maureen A. Fitzgerald, Commissioner of Community and Youth Services shall be authorized to execute said extension; and be it further

RESOLVED, that the Comptroller is hereby authorized to make payment for same, in accordance with the applicable terms and provisions of said agreement, upon presentation of a duly certified claim, after audit; and be it further

RESOLVED, that the funds for said payment are to be drawn from Account No. CYS A 7020 47660 000 0000.

-#-

The foregoing resolution was declared adopted after a poll of the members of the Board; the vote being recorded as follows:

Supervisor Saladino	Aye
Councilman Muscarella	Absent
Councilman Macagnone	Absent
Councilwoman Alesia	Aye
Councilwoman Johnson	Aye
Councilman Imbroto	Aye
Councilman Hand	Aye

cc: Supervisor
Town Attorney
Comptroller (2)
Community & Youth Services

Meeting of December 11, 2018 Resolution No. 775-2018

Reviewed By
Office of Town Attorney

WHEREAS, by Resolution No. 72-2017, adopted February 14, 2017, the Town Board authorized and directed Super Sounds Entertainment, Incorporated, doing business as Brilliance Event Productions, 117B Newtown Road, Plainview, New York 11803, to provide professional lighting equipment to be used during the Music Under the Stars concerts and various other special events, pursuant to an Agreement, for the amount of $65,000 for the period beginning February 15, 2017 through December 31, 2017 with three (3) one (1) year extension options; and

WHEREAS, by Resolution No. 713-2017, adopted November 14, 2017, the Town Board authorized the Department of Community and Youth Services to enter into the first of three (3) one (1) year extensions, for the period January 1, 2018 through December 31, 2018; and

WHEREAS, Maureen A. Fitzgerald, Commissioner of the Department of Community and Youth Services, by memorandum dated November 15, 2018, requested Town Board authorization to exercise the second option to extend the Agreement for one year, from January 1, 2019 through December 31, 2019, in an amount not to exceed $65,000.00; and

WHEREAS, funds for the Agreement are available in Account CYS A 7020 47660 000 0000, Special Events;

NOW, THEREFORE, BE IT RESOLVED, that the recommendation as hereinabove set forth is hereby accepted and approved, and the Department of Community and Youth Services is hereby authorized on behalf of the Town to enter into a second one year extension of the Agreement with Super Sounds Entertainment, Incorporated, DBA Brilliance Event Productions, to provide professional lighting equipment to be used during the Music Under the Stars concerts and other special events for the period from January 1, 2019 through December 31, 2019, in an amount not to exceed $65,000; and be it further

RESOLVED, that Maureen A. Fitzgerald, Commissioner of Community and Youth Services is hereby authorized to execute said extension; and be it further

RESOLVED, that the Comptroller is hereby authorized to make payment for same, in accordance with the applicable terms and provisions of said agreement, upon presentation of a duly certified claim, after audit; and be it further

RESOLVED, that the funds for said payment are to be drawn from Account No. CYS A 7020 47660 000 0000, Special Events.

#

The foregoing resolution was declared adopted after a poll of the members of the Board; the vote being recorded as follows:

Supervisor Saladino	Aye
Councilman Muscarella	Aye
Councilman Macagnone	Aye
Councilwoman Alesia	Aye
Councilwoman Johnson	Aye
Councilman Imbroto	Aye
Councilman Hand	Aye

cc: Supervisor
Town Attorney
Comptroller
Community & Youth Services

Contract No. 2-2020

AGREEMENT

This Agreement, made the 1st day of January, 2020 by and between the Town of Oyster Bay, by and through its Department of Community & Youth Services, having its principal office at 977 Hicksville Road, Massapequa, New York 11758 (hereinafter referred to as "TOWN") and **Super Sounds Entertainment, Incorporated dba Brilliance Event Productions,** having its principal office at 948 Mirabelle Avenue, Westbury, NY 11590. The Agreement is to provide the required lighting equipment and services for the Town of Oyster Bay's "Music Under the Stars" concert series and the 9/11 Memorial Ceremony.

Terms of Agreement

This Agreement is for the period beginning January 1, 2020 and ending December 31, 2020. Super Sounds Entertainment, Incorporated dba Brilliance Event Productions agrees to provide services in accordance with the rates stipulated in Appendix I, which is attached hereto and in all respects made a part hereof by reference. The cost of these services shall not exceed $65,000.00.

Claims and Invoices

Super Sounds Entertainment, Incorporated dba Brilliance Event Productions shall submit an individual invoice and a "Town of Oyster Bay Claim" form with, an original signature, for each performance itemizing the package cost and any extras.

Date: _____

_____
Robert Richards
Super Sounds Entertainment, Incorporated dba
Brilliance Event Productions

Date: _____

_____
Maureen A. Fitzgerald, Commissioner
Department of Community & Youth Services

Reviewed By
Office of Town Attorney

APPENDIX I

Brilliance Event Productions Price List

Small Lighting Package

- Six (6) Martin Mac Aura LED wash
- Four (4) Martin Mac 700 Intelligent Lights
- Eight (8) ETC - Source Four par
- One Altman long throw follow spot
- One Lighting console
- One Lighting Technician
- One follow spot Operator
- Four (4) 12 X 12 X 8 ft. Tomcat Truss Uprights
- Two applied L-16 ground supports
- Three Phase Distribution with feeder cable

$1,700.00

Large Lighting Package

- Six (6) Martin Mac 700 Intelligent Lights
- Twelve (12) Martin Mac Aura LED wash
- Eight (8) ETC - Source Four par
- One Lighting console
- One LED dimming system
- One Altman long throw follow spot
- One Lighting Technician
- One follow spot Operator
- Six (6) 12 X 12 X 8 ft. Tomcat Truss Uprights
- Two applied L-16 ground supports

$2,400.00

Dance Area

- Four eight foot vertical box truss with base plate
- Four intelligent lights mounted to the top of each upright
- One lighting technician

$600.00

APPENDIX I...continued

Brilliance Event Productions Price List

Extra Equipment	
24 inch Mirror Ball	**No Charge**
4 Foot Mirror Ball	**$200.00**
Theatrical Hazer	**$50.00**
Additional Martin Mac Aura's	**$200.00**
Additional Intelligent fixtures	**$200.00**
One Black Theatrical curtain 16'x40'	**$200.00**
70 inch LED Monitor	**$600.00**
60 inch Plasma	**$400.00**
Lighting technician	**$250.00**
Follow spot	**$400.00**
Disc Jockey with Sound System	**$500.00**
Dry ice machine (with two blocks of dry ice)	**$300.00**
Snow Machine	**$150.00**

WHEREAS, by Resolution No. 73-2017, adopted February 14, 2017, the Town Board authorized and directed EKOPLEX, INC. d/b/a EKO Productions, 360-C Commack Road, Deer Park, New York 11729, to provide professional sound equipment to be used during the Music Under the Stars concerts and various other special events, pursuant to an Agreement for an amount not to exceed $140,000.00 for the period beginning February 15, 2017 through December 31, 2017, with an option for three (3) one (1) year extensions; and

WHEREAS, by Resolution No. 714-2017, adopted November 14, 2017, the Town Board authorized the Department of Community and Youth Services to enter into the first of three one-year extensions, for the period January 1, 2018 through December 31, 2018; and

WHEREAS, by Resolution No. 736-2018, adopted November 20, 2018, the Town Board authorized the Department of Community and Youth Services to enter into the second of three one-year extensions, for the period January 1, 2019 through December 31, 2019; and

WHEREAS, Maureen A. Fitzgerald, Commissioner of the Department of Community and Youth Services, by memorandum dated October 31, 2019, requested Town Board authorization to exercise the third and final option to extend the Agreement for one year, from January 1, 2020 through December 31, 2020, in an amount not to exceed $140,000.00; and

WHEREAS, by said by memorandum dated October 31, 2019, Commissioner Fitzgerald requested Town Board authorization for the Supervisor or his designee, or the Commissioner of the Department of Community and Youth Services, to sign the extension Agreement for the period January 1, 2020 through December 31, 2020; and

WHEREAS, funds for the Agreement are available in Account CYS A 7020 47660 000 0000 Special Events;

NOW, THEREFORE, BE IT RESOLVED, that the recommendation as hereinabove set forth is hereby accepted and approved, and the Department of Community and Youth Services is hereby authorized on behalf of the Town to exercise the third and final one year extension of the Agreement with EKOPLEX, INC. d/b/a EKO Productions to provide professional sound equipment to be used during the Music Under the Stars concerts and other special events for the period from January 1, 2020 through December 31, 2020, in an amount not to exceed $140,000.00 and be it further

RESOLVED, that the Supervisor, or his designee, shall be authorized to execute said extension; and be it further

RESOLVED, that the Comptroller is hereby authorized to make payment for same, in accordance with the applicable terms and provisions of said agreement, upon presentation of a duly certified claim, after audit; and be it further

RESOLVED, that the funds for said payment are to be drawn from Account No. CYS A 7020 47660 000 0000 Special Events.

-#-

Reviewed By
Office of Town Attorney
Elizabeth O. Scaughan

The foregoing resolution was declared adopted after a poll of the members of the Board; the vote being recorded as follows:

Supervisor Saladino	Aye
Councilman Muscarella	Aye
Councilman Macagnone	Aye
Councilwoman Johnson	Aye
Councilman Imbroto	Aye
Councilman Hand	Aye
Councilman Labriola	Aye

-6-

690

TOWN OF OYSTER BAY
Inter-Departmental Memorandum

October 31, 2019

TO: Memorandum Docket

FROM: Maureen A. Fitzgerald, Commissioner
Department of Community and Youth Services

SUBJECT: Agreement with EKOPLEX, Incorporated, D/B/A EKO Productions

---

The Department of Community and Youth Services is requesting Town Board authorization to enter into an Agreement with EKOPLEX, Incorporated, D/B/A EKO Productions, for professional sound equipment and services used during the Music Under the Stars concerts and various other special events. Town Board Resolution No. 73-2017, dated February 14, 2017, authorized the Agreement for the period beginning February 15, 2017 through December 31, 2017 with an option to extend for three (3) additional years. Town Board Resolution No. 714-2017, dated November 14, 2017, provided authorization for the period January 1, 2018 through December 31, 2018. Town Board Resolution No. 736-2018, dated November 20, 2018, provided authorization for January 1, 2019 through December 31, 2019.

If approved, the Agreement will be in an amount not to exceed $140,000.00 for the period beginning January 1, 2020 through December 31, 2020. This will be the last year of the optional three (3) one-year extensions.

The Department is in full compliance with Guideline 9 of the Town's Procurement Policy. A copy of the Agreement and Certification of Disclosure Form are attached. Funds for the Agreement will be available in Account CYS A 7020 47660 000 0000, *Special Events* once the 2020 Budget has been put in place.

Therefore, it is respectfully requested that the Town Board authorize the Town to enter into an agreement, as negotiated and approved by the Town Attorney's Office, and further authorize the Supervisor and/or his designee or the Commissioner of Community and Youth Services to execute said agreements.

Maureen A. Fitzgerald
Maureen A. Fitzgerald
Commissioner

MAF:iw
Attachments
cc: Town Attorney (+9 copies)

New York State Department of Taxation and Finance - Sales Tax

Certificate of Authority

Identification Number

[redacted]

(Use this number on all returns and correspondence)

EKOPLEX, INC.
EKO PRODUCTIONS
360 COMMACK RD
DEER PARK , NY 11729-5520

VOID
VALIDATED
PROCESSING DIV
SALES TAX
02/07/2000
DEPT OF TAX
AND FINANCE

is authorized to collect sales and use taxes under Articles 28 and 29 of the New York State Tax Law.

Not Transferable

This certificate must be prominently displayed in your place of business listed above.
Fraudulent or other improper use of this certificate may cause it to be revoked.
This certificate may not be photocopied or reproduced.

DTF-17 C (3/97)

Meeting of February 14, 2017

Resolution No. 73-2017

FO. 2286

Reviewed By
Office of Town Attorney

WHEREAS, Maureen A. Fitzgerald, Commissioner of the Department of Community and Youth Services, by memorandum dated January 19, 2017, requested Town Board authorization to enter into an agreement with EKO Productions, Incorporated, for professional sound equipment and services used during the Music Under the Stars concerts and various other special events. The Agreement would be for the amount of $140,000 for the period beginning February 15, 2017 through December 31, 2017 with three (3) one (1) year extension options; and

WHEREAS, a Request for Proposals was sent out on November 21, 2016 to six (6) companies that provide these services. One timely response was received from EKO Productions, Incorporated, 360-C Commack Road, Deer Park, New York 11729; and

WHEREAS, in accordance with both the Procurement Policy and the criteria set forth in the Request for Proposals, the Department of Community and Youth Services selected EKO Productions, Incorporated,

NOW, THEREFORE, BE IT RESOLVED, That the recommendation as hereinabove set forth is hereby accepted and approved, and the Department of Community and Youth Services, is hereby authorized to enter into an agreement on behalf of the Town with EKO Productions, Incorporated, in an amount not to exceed $140,000 for the period beginning February 15, 2017 through December 31, 2017 with three (3) one (1) year extension options; and be it further

RESOLVED, that Maureen A. Fitzgerald, Commissioner of the Department of Community and Youth Services be authorized to execute said Agreement; and be it further

RESOLVED, that the Comptroller is hereby authorized to make payment for same, in accordance with the applicable terms and provisions of said agreement, upon presentation of a duly certified claim, after audit; and be it further

RESOLVED, That the funds for said payment are to be drawn from Account No. CYS A 7020 47660 000 0000.

-#-

The foregoing resolution was declared adopted after a poll of the members of the Board; the vote being recorded as follows:

Supervisor Saladino	Aye
Councilman Muscarella	Aye
Councilman Macagnone	Nay
Councilman Coschignano	Aye
Councilman Pinto	Aye
Councilwoman Alesia	Aye
Councilwoman Johnson	Aye

cc: Supervisor
Town Attorney
Comptroller (2)
Community & Youth Services

Reviewed By
Office of Town Attorney

Meeting of November 14, 2017 Resolution No. 714-2017

WHEREAS, by Resolution 73-2017, adopted February 14, 2017, the Town Board authorized and directed EKO Productions, Incorporated, 360-C Commack Road, Deer Park, New York 11729, to provide professional sound equipment to be used during the Music Under the Stars concerts and various other special events, pursuant to an Agreement for an amount not to exceed $140,000.00 for the period beginning February 15, 2017 through December 31, 2017 with an option for three (3) one (1) year extensions; and

WHEREAS, Maureen A. Fitzgerald, Commissioner of the Department of Community and Youth Services, by memorandum dated October 19, 2017, requested Town Board authorization to exercise the option to extend the Agreement for one year, from January 1, 2018 through December 31, 2018, in an amount not to exceed $140,000.00; and

WHEREAS, funds for the Agreement are available in Account CYS A 7020 47660 000 0000;

NOW, THEREFORE, BE IT RESOLVED, that the recommendation as hereinabove set forth is hereby accepted and approved, and the Department of Community and Youth Services is hereby authorized on behalf of the Town to enter into a one year extension of the Agreement with EKO Productions, Incorporated to provide professional sound equipment to be used during the Music Under the Stars concerts and other special events for the period from January 1, 2018 through December 31, 2018, in an amount not to exceed $140,000; and be it further

RESOLVED, that the Supervisor, or his designee, shall be authorized to execute said extension; and be it further

RESOLVED, that the Comptroller is hereby authorized to make payment for same, in accordance with the applicable terms and provisions of said agreement, upon presentation of a duly certified claim, after audit; and be it further

RESOLVED, that the funds for said payment are to be drawn from Account No. CYS A 7020 47660 000 0000.

-#-

The foregoing resolution was declared adopted after a poll of the members of the Board; the vote being recorded as follows:

Supervisor Saladino	Aye
Councilman Muscarella	Absent
Councilman Macagnone	Absent
Councilwoman Alesia	Aye
Councilwoman Johnson	Aye
Councilman Imbroto	Aye
Councilman Hand	Aye

cc: Supervisor
Town Attorney
Comptroller (2)
Community & Youth Services

Meeting of November 20, 2018

Resolution No.736-2018

WHEREAS, by Resolution No. 73-2017, adopted February 14, 2017, the Town Board authorized and directed EKO Productions, Incorporated, 360-C Commack Road, Deer Park, New York 11729, to provide professional sound equipment to be used during the Music Under the Stars concerts and various other special events, pursuant to an Agreement for an amount not to exceed $140,000.00 for the period beginning February 15, 2017 through December 31, 2017, with an option for three (3) one (1) year extensions; and

WHEREAS, by Resolution No. 714-2017, adopted November 14, 2017, the Town Board authorized the Department of Community and Youth Services to enter into the first of three one-year extensions, for the period January 1, 2018 through December 31, 2018; and

WHEREAS, Maureen A. Fitzgerald, Commissioner of the Department of Community and Youth Services, by memorandum dated November 1, 2018, requested Town Board authorization to exercise the second option to extend the Agreement for one year, from January 1, 2019 through December 31, 2019, in an amount not to exceed $140,000.00; and

WHEREAS, funds for the Agreement are available in Account CYS A 7020 47660 000 0000 Special Events;

NOW, THEREFORE, BE IT RESOLVED, that the recommendation as hereinabove set forth is hereby accepted and approved, and the Department of Community and Youth Services is hereby authorized on behalf of the Town to exercise the second one year extension of the Agreement with EKO Productions, Incorporated to provide professional sound equipment to be used during the Music Under the Stars concerts and other special events for the period from January 1, 2019 through December 31, 2019, in an amount not to exceed $140,000; and be it further

RESOLVED, that the Supervisor, or his designee, shall be authorized to execute said extension; and be it further

RESOLVED, that the Comptroller is hereby authorized to make payment for same, in accordance with the applicable terms and provisions of said agreement, upon presentation of a duly certified claim, after audit; and be it further

RESOLVED, that the funds for said payment are to be drawn from Account No. CYS A 7020 47660 000 0000 Special Events.

-#-

Reviewed By
Office of Town Attorney

The foregoing resolution was declared adopted after a poll of the members of the Board; the vote being recorded as follows:

Supervisor Saladino	Aye
Councilman Muscarella	Aye
Councilman Macagnone	Aye
Councilwoman Alesia	Absent
Councilwoman Johnson	Aye
Councilman Imbroto	Aye
Councilman Hand	Aye

cc: Supervisor
Town Attorney
Comptroller
Community & Youth Services

Contract No. 1-2020

AGREEMENT

This Agreement, made the 1st day of January, 2020 by and between the Town of Oyster Bay, by and through its Department of Community & Youth Services, having its principal office at 977 Hicksville Road, Massapequa, New York 11758 (hereinafter referred to as "TOWN") and EKO Productions, Incorporated having its principal office at 360-C Commack Rd, Deer Park, New York, 11729, is to provide the required sound equipment and services for the Town of Oyster Bay's "Music Under the Stars" concert series, 9/11 Memorial Ceremony and the Holiday concert series.

Terms of Agreement

This Agreement is for the period beginning January 1, 2020 and ending December 31, 2020. EKO Productions, Incorporated agrees to provide services in accordance with the rates stipulated in Appendix I, which is attached hereto and in all respects made a part hereof by reference. The cost of these services shall not exceed $140,000.00.

Claims and Invoices

EKO Productions, Incorporated shall submit an individual invoice and a "Town of Oyster Bay Claim" form with, an original signature, for each performance itemizing the package cost and any extras.

Date: _____ _____

Steven Porcelli
EKO Productions, Inc.

Date: _____ _____

Maureen A. Fitzgerald, Commissioner
Department of Community and Youth Services

Reviewed By
Office of Town Attorney

Appendix I

EKO Price List

Concert Sound System 40 Channel Console — **$ 1,875.00**

Basic Sound System Package — **$ 850.00**

24 Channel Soundcraft 500 Console
1/3 Octave Equalizer
Comp. Limiters, Gates
4-Way Crossover
Stereo 2/3 Octave Equalizer on Monitors
2 Spks 90 Units & CD Player
Full 3-Way Sound System
2 EK3 Speakers
2 EK3 Speaker Subs
4 Floor Wedges
All Crown Power
4000 Watts of Power
Mic's, Stands, Cables
1 Engineer
Truck/SetUp/Break Down
2-Man Crew

Small Monitor System Package — **$ 675.00**

24 Channel 2408 Console
4 JBL Monitors
4-Way Mix
4 2/3 Octave Equalizer's
2 Crown Amps
Splitter Snake
1 Extra Engineer
Overtime Included

Large Monitor System — **$ 1,350.00**

40X12 Channel M2 Soundcraft Console
8 Bi-Amp Monitors
8-Way Mix
8 I/3 Octave Equalizer's
8 Comp. Limiters
8 Crown Power Amps
Splitter Snake
1 Extra Engineer
Overtime Included

Reviewed By
Office of Town Attorney

Large Monitor System (plus) — **$ 1,875.00**

Large Monitor System plus Side Fills, 12 Wedges, and
1 Drum Monitor

Appendix I....continued

Extra Equipment

Front Of House (FOH) Concert System	$ 1,875.00

40 Channel Soundcraft Series 11 Console
2 Klark Teknik 31 Band EQ
2 DBX 160 XT Limiters
12 Patchable Comps DBX
8 Noise Gates
6 Digital EFX
All Crown Power
Microphones, Stands, & Cables
12 EAW KF850 Speakers
DBX 260 Drive Racks
CD Player
Splitter Snake
3 Phase PD Panel
1 Engineer, 2 Man Crew
Setup/Breakdown

Front Of House (FOH) Large Concert System	$ 2,475.00

Avid Venue SC 48
2 Klark Teknik 31 Band EQ
2 DBX 160 XT Limiters
All Crown Power
Microphones, Stands, & Cables
12 EAW KF850 Speakers
DBX 260 Drive Racks
CD Player
Splitter Snake
3 Phase PD Panel
1 Engineer, 2 Man Crew
Setup/Breakdown

Early Load-In per Hour	$ 50.00

Sound System Gear	
Large Delay Tower System	$ 650.00

Small Delay Tower System	$ 220.00
56 Channel Yamaha PM 5D Console	$ 600.00
40X12 Soundcraft M 11 Console	$ 350.00
40X8 Soundcraft Series 11 Console	$ 350.00
24X8 Yamaha Monitor Console	$ 250.00

Appendix I....continued

Extra Equipment

Sound System Gear...continued

24 Channel Soundcraft Console	$ 225.00
12 Channel 1202 Mackie Mixer	$ 75.00
3-Way Amp Rack	$ 250.00
Amp/Equalizer Rack	$ 150.00
Crown Amp	$ 75.00
DBX 160 XT Limiter	$ 25.00
DBX 260 Drive Rack	$ 35.00
1/3 Octive Equalizer	$ 30.00
Klark Teknik 31 Band Equalizer	$ 30.00
DBX Patchable Comp	$ 25.00
Patchable EFX	$ 35.00
PD Panel	$ 150.00
EAW KF850 Speaker	$ 100.00
4 Nearfield Speakers	$ 200.00
Side Fill Speaker	$ 100.00
Tri Amp Side Fill Speakers	$ 650.00
JBL Wedge	$ 25.00
Bi-Amp 15 x 2 Wedge	$ 60.00
Drum Monitor	$ 100.00
Splitter Snake	$ 200.00
100 Ft. Snake	$ 50.00
Cassette Deck	$ 20.00
CD Recorder	$ 60.00

Microphones

Beta 87 U1 Wireless	$ 75.00
Clip On Horn Mics	$ 20.00
Shure Beta-98	$ 25.00
Shure PS700/In-Ear Mic	$ 125.00
Shure U2/Beta 58A Hand Held Transmitter	$ 75.00
Shure UHF U4D Wireless Receiver	$ 75.00
Shure Wireless w/Batteries for Summer	$ 350.00
Shure A98KCS Horn Clamp	$ 5.00
Clear Com	$ 40.00

Drums

5 Pcs DW Kit w/all DW Hardware/Stool	$ 350.00
5 Pcs Yamaha Drum Kit w/all Hardware/Stool	$ 350.00
Adjustable Throne	$ 10.00
Cymbal w/Stand	$ 15.00
Drum Carpet w/Drums	No Charge
Drum Carpet without	$ 10.00
Plex Glass for Drums	$ 100.00
Snare w/Stand	$ 60.00

Appendix I....continued

Extra Equipment

Percussion

2 LP Congas/w Stand		$ 120.00
2 Timbales/w Stand		$ 90.00
2 Timbaletos/w Stand		$ 135.00
2 LP Bongos/w Stand		$ 40.00
LP Everything Rack		$ 25.00
LP Table		$ 10.00
Percussion Table/Stand		$ 50.00
Cowbell		$ 5.00
Cowbell Pedal		$ 25.00
Medium Triangle		$ 5.00
Orchestra Bells/Mallets (Glock)		$ 100.00
Shakers or Jam Block (each)		$ 5.00
Tambourine		$ 5.00
Tube Bells		$ 200.00
Wind Chimes		$ 20.00
Medium or Large Timpani	(each)	$ 135.00
Claves		$ 5.00
1 Pair of Maracas or Castanets		$ 5.00
1 Guiro		$ 5.00
Grand Cassa		$ 125.00
Vibraphone		$ 350.00
3 Ft. Percussion Table		$ 20.00

Risers

4X4 Riser	$ 50.00
4X8 Riser	$ 100.00
8X8 Riser	$ 200.00

Additional Staff

Extra Engineer	$ 350.00
Drum Technician	$ 250.00
Helper	$ 150.00

Keyboards & Accessories

Grand Piano/Tuned	$ 1,100.00
Hammond B-3 w/Pedal Board & Bench	$ 550.00
Leslie 122 Speaker Cabinet	$ 100.00
Trek 11 Pedal	$ 60.00
Kurtzweil PC 88 Keyboard w/Pedal	$ 250.00
Kurtzweil K2600XS Keyboard w/Pedal	$ 275.00
Korg SG1-D Keyboard	$ 125.00
Korg M 1	$ 125.00
Korg Triton 64 Keys	$ 150.00
Korg Triton Pro 74 Keys	$ 175.00

Appendix I....continued

Extra Equipment

Keyboards & Accessories.....Continued	
Korg Trinity Plus Synthesizer	$ 225.00
Korg Triton 88 Keys Keyboard/Pedal/Stool	$ 250.00
Korg Triton Extreme	$ 225.00
Roland Keyboard Amp	$ 75.00
Roland RD 700 Keyboard	$ 225.00
Roland XP-80 Keyboard	$ 130.00
Roland VK8 Keyboard	$ 250.00
Roland Expansion Board	$ 20.00
Keyboard Mixer	$ 75.00
Yamaha Motif-6 Keyboard	$ 200.00
Yamaha Motif XS7 Keyboard	$ 225.00
Yamaha Motif 8XS Keyboard	$ 250.00
Yamaha P80 Keyboard	$ 100.00
Quick Lock Single Tier Keyboard Stand	$ 20.00
2 Tier Keyboard Stands	$ 30.00
Apex Keyboard Stand	$ 15.00
Yamaha EV5 Expression Pedal	$ 25.00
Boss FV 300 Vol Pedal	$ 15.00
Piano Bench	$ 10.00
Piano Tuner	$ 150.00
Nord Electro Keyboard	$ 150.00

Accessories	
9 Volt, AA, AAA, Batteries	No Charge
Bar Stools/Box Fan/GTR Stands	No Charge
BNC Cables	No Charge
Guitar Stand Boat (Holds 7 Gtr's)	$ 15.00
Guitar Cables	No Charge
K & M Sax Stands	No Charge
Midi Cables	No Charge
Music Stands	$ 5.00
Music Stand Lights	No Charge
1 Pioneer DJM 800 Mixer	$ 125.00

1 Pioneer CDJ 100 MK2 Turntable	$ 105.00
1 DJ Monitor	$ 50.00

Guitars & Guitar Amps	
4 x 12 Marshall Speaker Bottom	$ 50.00
Marshall JCM 2000 Guitar Amp	$ 75.00
Marshall JCM 800 Guitar Amp	$ 75.00
Marshall 1/2 Stack Amp	$ 125.00
Marshall Valve State 2X12 Combo Amp	$ 75.00
Line 6 Flextone 120 Amp	$ 85.00
Line 6 Pedal Board	$ 35.00
Fender Blues Deville Guitar Amp	$ 75.00

Appendix I....continued

Extra Equipment

Guitars & Guitar Amps	
Fender Deville Guitar Amp	$ 75.00
Fender Deluxe Guitar Amp	$ 75.00
Fender Super Champ Guitar Amp	$ 65.00
Fender Twin Reissue 1965 w/Pedal	$ 75.00
Mesa Boogie Mark IV Combo w/Pedal Board	$ 75.00
Roland JC 120 Guitar Amp	$ 70.00
Vox AC 30 Guitar Amp	$ 75.00
Gibson Les Paul Guitar	$ 75.00
Fender Acoustic Guitar	$ 75.00
Fender Stratocaster Guitar	$ 75.00
Takamine Acoustic/Electric Guitar	$ 85.00
Guild Acoustic/Electric Guitar	$ 85.00
12 String RIC Guitar	$ 85.00
Korg DTR/Rack Mount Tuner	$ 20.00
Shure UHF Wireless Guitar System	$ 100.00

Bass Guitar & Amps	
GK 700/1001 RB Bass Amp	$ 75.00
Hartke 4X10 XL Cabinet	$ 70.00
Hartke 1X15 XL Cabinet	$ 60.00
GK 700 RB Full Bass Rig	$ 180.00
Ampeg SVT Amp	$ 100.00
Ampeg 8 x 10 Cabinet	$ 100.00
Ampeg SVT Bass Rig	$ 200.00
SWR 900 Bass Amp	$ 75.00
SWR Mega Goliath 810 Cabinet	$ 75.00
Fender Bass Guitar	$ 75.00
Fender 5 String Guitar	$ 85.00
Korg DTR/Rack Mount Tuner	$ 20.00
Shure UHF Wireless Guitar System	$ 100.00

Meeting of November 19, 2019 Resolution No. 691-2019

Reviewed By
Office of Town Attorney

WHEREAS, Maureen A. Fitzgerald, Commissioner, Department of Community and Youth Services, by memorandum dated October 31, 2019, requested Town Board authorization to retain the professional services of Jock Anderson, as an Art Instructor for the Senior Citizens Service Program for programs to be provided from January 1, 2020 through December 31, 2020, at a cost of $80.00 per session, in an amount not to exceed $3,360.00, with funds available in *Special Events* Account No. CYS A 7020 47660 000 0000,

NOW, THEREFORE, BE IT RESOLVED, That the request as hereinabove set forth is accepted and approved and the Department of Community and Youth Services is authorized to retain the professional services of Jock Anderson, as an Art Instructor for the Senior Citizens Service Program for a total of ten (10) weeks, at a cost of $80.00 per session, in an amount not to exceed $3,360.00, with funds available in *Special Events* Account No. CYS A 7020 47660 000 0000.

-#-

The foregoing resolution was declared adopted after a poll of the members of the Board; the vote being recorded as follows:

Supervisor Saladino	Aye
Councilman Muscarella	Aye
Councilman Macagnone	Aye
Councilwoman Johnson	Aye
Councilman Imbroto	Aye
Councilman Hand	Aye
Councilman Labriola	Aye

TOWN OF OYSTER BAY

Inter-Departmental Memorandum

October 31, 2019

TO: Memorandum Docket

FROM: Maureen A. Fitzgerald, Commissioner
Department of Community and Youth Services

SUBJECT: Art Instructor for Senior Program

The Department of Community & Youth Services is requesting Town Board authorization to retain the professional services of Jock Anderson, [redacted] as an Art Instructor for the Senior Citizens Services Program.

If approved, the art instruction will be provided from January 1, 2020 through December 31, 2020, at a rate of $80.00 per session for a total cost not to exceed $3,360.00. Funds for the art instruction classes will be available in Account # CYS A 7020 47660 000 0000, *Special Events*.

In accordance with Guideline 5, of the Town's Procurement Policy, this Instructor is exempt from the solicitation, written proposal or quotation requirements of the policy.

Therefore, it is respectfully requested that the Town Board authorize the Town to enter into an agreement, as negotiated and approved by the Town Attorney's Office, and further authorize the Supervisor and/or his designee or the Commissioner of Community and Youth Services to execute said agreements.

Maureen A. Fitzgerald
Commissioner

MAF:mtr
cc: Town Attorney (Original +9 copies)

Contract Number: 4-2020

Agreement

This Agreement made the 1st day of January, 2020, by and between the Town of Oyster Bay's Department of Community and Youth Services (hereinafter referred to as "TOWN") and Jock Anderson, [redacted] (hereinafter referred to as "CONTRACTOR") for the purpose of providing Art Instruction Classes.

It is mutually agreed by and between both parties as follows:

1. CONTRACTOR agrees to provide art instruction to Town of Oyster Bay residents through this agreement with the Department of Community & Youth Services.

2. CONTRACTOR agrees to follow the schedule of days, times, and locations assigned by the Commissioner of the Department of Community and Youth Services, and/or her designee.

3. For the duration of the Agreement, TOWN agrees to pay CONTRACTOR the sum of $80.00 per session, the total hours of instruction shall not exceed 266 hours and total payment shall not exceed $3,360.00. Once the Agreement has been executed payment shall be made at after the class has been completed and upon submission, by CONTRACTOR, of a duly certified claim form approved by TOWN and filed in the Office of the Comptroller.

4. CONTRACTOR agrees that she is, and at all times shall be deemed to be, an independent contractor, and shall not at any time or for any purpose be deemed an employee of TOWN, and that CONTRACTOR shall not in any manner whatsoever, by his actions or deed, commit TOWN to any obligation irrespective of the nature thereof.

5. CONTRACTOR shall not assign, transfer, sublet or otherwise dispose of any part of this agreement without prior written consent from the TOWN.

It is further agreed that this Agreement will commence on January 1, 2020 and expire on December 31, 2020.

_____
SIGNATURE OF CONTRACTOR

_____
SIGNATURE OF COMMISSIONER

DATE: _____

DATE: _____

Reviewed By
Office of Town Attorney

Reviewed By
Office of Town Attorney

WHEREAS, by Resolution No. 65-2017, adopted on February 14, 2017, the Town of Oyster Bay's Department of Community and Youth Services was authorized to pay an annual licensing fee to the American Society of Composers, Authors and Publishers ("ASCAP"); and

WHEREAS, Maureen A. Fitzgerald, Commissioner, Department of Community and Youth Services, by memorandum dated October 31, 2019, advised the Town Board that all music performed through the Town's programs must be licensed through ASCAP, and requested Town Board approval, to pay the 2020 licensing fee to ASCAP for the period covering January 1, 2020 through December 31, 2020, in the amount to be determined by ASCAP and invoiced to the Town in late December 2019, but not to exceed $3,500.00; and

WHEREAS, funds for the ASCAP renewal fee are available in Account CYS A 7020 47660 000 0000,

NOW, THEREFORE, BE IT RESOLVED, that the request as hereinabove set forth is approved, and the Town Board hereby authorizes the payment of the 2020 licensing fee to ASCAP, from January 1, 2020 through December 31, 2020, in the amount determined by ASCAP and invoiced to the Town in late December 2019, but not to exceed $3,500.00; and be it further

RESOLVED, that the Comptroller is hereby authorized and directed to make payment for same, upon presentation of a duly certified claim, after audit, with funds for said payment to be drawn from Account No. CYS A 7020 47660 000 0000.

#

The foregoing resolution was declared adopted after a poll of the members of the Board; the vote being recorded as follows:

Supervisor Saladino	Aye
Councilman Muscarella	Aye
Councilman Macagnone	Aye
Councilwoman Johnson	Aye
Councilman Imbroto	Aye
Councilman Hand	Aye
Councilman Labriola	Aye

6

TOWN OF OYSTER BAY

Inter-Departmental Memorandum

October 31, 2019

TO: Memorandum Docket

THROUGH: Maureen A. Fitzgerald, Commissioner
Department of Community and Youth Services

SUBJECT: Renewal of Performance License with ASCAP

The Department of Community & Youth Services requests authorization to renew a performance license with the American Society of Composers, Authors and Publishers (ASCAP). This year, the performance license was authorized by Town Board Resolution No. 734-2018, dated November 20, 2018.

All music performed through the Town's various programs must be licensed through ASCAP. This license is one of three that the Department renews each year which covers all Town sponsored performances and events.

The performance licensing fee will be based on the Town's current population and the invoice will be sent out near the end of December. The agreement will be ratified and continued from January 1, 2020 through December 31, 2020. The cost of renewing the performance license shall not exceed $3,500.00 but will be paid based on the actual invoice amount. Funds for the renewal fee will be available in Account CYS A 7020 47660 000 0000, *Special Events*.

Maureen A. Fitzgerald
Commissioner

MAF:iw
Attachment
cc: Town Attorney (+9 copies)

Meeting of November 20, 2018 Resolution No.734-2018

Reviewed By
Office of Town Attorney

WHEREAS, by Resolution No. 65-2017, adopted on February 14, 2017, the Town of Oyster Bay's Department of Community and Youth Services was authorized to pay an annual licensing fee to the American Society of Composers, Authors and Publishers ("ASCAP"); and

WHEREAS, Maureen A. Fitzgerald, Commissioner, Department of Community and Youth Services, by memorandum dated November 1, 2018, advised the Town Board that all music performed through the Town's programs must be licensed through ASCAP, and requested Town Board approval, to pay the 2019 licensing fee to ASCAP for the period covering January 1, 2019 through December 31, 2019, in the amount to be determined by ASCAP and invoiced to the Town in late December 2018, but not to exceed $3,500.00; and

WHEREAS, funds for the ASCAP renewal fee are available in Account CYS A 7020 47660 000 0000,

NOW, THEREFORE, BE IT RESOLVED, that the request as hereinabove set forth is approved, and the Town Board hereby authorizes the payment of the 2019 licensing fee to ASCAP, from January 1, 2019 through December 31, 2019, in the amount determined by ASCAP and invoiced to the Town in late December 2018, but not to exceed $3,500.00; and be it further

RESOLVED, that the Comptroller is hereby authorized and directed to make payment for same, upon presentation of a duly certified claim, after audit, with funds for said payment to be drawn from Account No. CYS A 7020 47660 000 0000.

#

The foregoing resolution was declared adopted after a poll of the members of the Board; the vote being recorded as follows:

Supervisor Saladino	Aye
Councilman Muscarella	Aye
Councilman Macagnone	Aye
Councilwoman Alesia	Absent
Councilwoman Johnson	Aye
Councilman Imbroto	Aye
Councilman Hand	Aye

cc: Supervisor
Town Attorney
Comptroller
Community & Youth Services

Meeting of November 19, 2019 Resolution No. 693-2019

WHEREAS, Maureen A. Fitzgerald, Commissioner, Department of Community and Youth Services, by memorandum dated October 31, 2019, requested authorization to renew a licensing agreement between the Town of Oyster Bay and the Society of European Stage Authors & Composers, Incorporated, in order to fulfill the requirement that all of the Town's music programs be licensed, at a cost not to exceed $4,000.00, from January 1, 2020 through December 31, 2020,

NOW, THEREFORE, BE IT RESOLVED, That the request as hereinabove set forth is accepted, and the Town of Oyster Bay hereby renews its licensing agreement with the Society of European Stage Authors & Composers, Incorporated for the period from January 1, 2020 through December 31, 2020, in order to fulfill the requirement that all of the Town's music programs be licensed, said agreement to be at a cost not to exceed $4,000.00, and the Comptroller is hereby authorized and directed to make payment for same upon presentation of a duly certified claim, after audit; and be it further

RESOLVED, That the funds for said payment are to be drawn from Account No. CYS A 7020 47660 000 0000.

-#-

Reviewed By
Office of Town Attorney

The foregoing resolution was declared adopted after a poll of the members of the Board; the vote being recorded as follows:

Supervisor Saladino	Aye
Councilman Muscarella	Aye
Councilman Macagnone	Aye
Councilwoman Johnson	Aye
Councilman Imbroto	Aye
Councilman Hand	Aye
Councilman Labriola	Aye

9

TOWN OF OYSTER BAY
Inter-Departmental Memorandum

October 31, 2019

TO: Memorandum Docket

FROM: Maureen A. Fitzgerald, Commissioner
Department of Community and Youth Services

SUBJECT: Renewal of Performance License with SESAC, Inc.

The Department of Community & Youth Services requests authorization to renew a performance license with Society of European Stage Authors & Composers, Incorporated (SESAC). Town Board Resolution No. 733-2018, dated November 20, 2018 authorized the license for the period beginning January 1, 2019 through December 31, 2019.

SESAC is a music performance licensing company. All music performed through the Town's programs must be licensed. This license is one of three licenses that the Department renews each year to cover all Town sponsored performances and events

The performance licensing fee will be based on the Town's current population and the invoice will be sent out near the end of December. The license will be ratified and continued from January 1, 2020 through December 31, 2020. The cost of renewing the performance license shall not exceed $4,000.00 but will be paid based on the actual invoice amount. Funds for the licensing fee will be available in Account No. CYS A 7020 47660 000 0000, *Special Events.*

Maureen A. Fitzgerald
Commissioner

MAF:iw
Attachment
cc: Town Attorney (+9 copies)

Reviewed By
Office of Town Attorney

Meeting of November 20, 2018

Resolution No.733-2018

WHEREAS, Maureen A. Fitzgerald, Commissioner, Department of Community and Youth Services, by memorandum dated November 1, 2018, requested authorization to renew a licensing agreement between the Town of Oyster Bay and the Society of European Stage Authors & Composers, Incorporated, in order to fulfill the requirement that all of the Town's music programs be licensed, at a cost not to exceed $3,900.00, from January 1, 2019 through December 31, 2019,

NOW, THEREFORE, BE IT RESOLVED, That the request as hereinabove set forth is accepted, and the Town of Oyster Bay hereby renews its licensing agreement with the Society of European Stage Authors & Composers, Incorporated from January 1, 2019 through December 31, 2019, in order to fulfill the requirement that all of the Town's music programs be licensed, said agreement to be at a cost of $3,900.00, and the Comptroller is hereby authorized and directed to make payment for same upon presentation of a duly certified claim, after audit; and be it further

RESOLVED, That the funds for said payment are to be drawn from Account No. CYS A 7020 47660 000 0000.

-#-

The foregoing resolution was declared adopted after a poll of the members of the Board; the vote being recorded as follows:

Supervisor Saladino	Aye
Councilman Muscarella	Aye
Councilman Macagnone	Aye
Councilwoman Alesia	Absent
Councilwoman Johnson	Aye
Councilman Imbroto	Aye
Councilman Hand	Aye

cc: Supervisor
Town Attorney
Comptroller
Community & Youth Services

Reviewed By
Office of Town Attorney

WHEREAS, Maureen A. Fitzgerald, Commissioner, Department of Community and Youth Services, by memorandum dated October 31, 2019, requested Town Board authorization to renew a performance licensing agreement between the Town of Oyster Bay and Broadcast Music, Incorporated (BMI), in order to fulfill the requirement that all of the Town's music programs be licensed, at a cost not to exceed $3,500.00, from December 1, 2019 through November 30, 2020,

NOW, THEREFORE, BE IT RESOLVED, That the request as hereinabove set forth is accepted, and the Town of Oyster Bay hereby renews its performance licensing agreement with Broadcast Music, Incorporated (BMI), for the period from December 1, 2019 through November 30, 2020, in order to fulfill the requirement that all of the Town's music programs be licensed, said agreement to be at a cost not to exceed $3,500.00, and the Comptroller is hereby authorized and directed to make payment for same upon presentation of a duly certified claim, after audit; and be it further

RESOLVED, That the funds for said payment are to be drawn from Account No. CYS A 7020 47660 000 0000.

-#-

The foregoing resolution was declared adopted after a poll of the members of the Board; the vote being recorded as follows:

Supervisor Saladino	Aye
Councilman Muscarella	Aye
Councilman Macagnone	Aye
Councilwoman Johnson	Aye
Councilman Imbroto	Aye
Councilman Hand	Aye
Councilman Labriola	Aye

10

TOWN OF OYSTER BAY
Inter-Departmental Memorandum

October 31, 2019

TO: Memorandum Docket

FROM: Maureen A. Fitzgerald, Commissioner
Department of Community and Youth Services

SUBJECT: Performance License – Broadcast Music, Incorporated

The Department of Community & Youth Services requests authorization to renew a performance license with Broadcast Music, Incorporated (BMI). The license was authorized for the period beginning December 1, 2018 through November 30, 2019 by Town Board Resolution No. 658-2018, dated October 16, 2018.

BMI represents 475,000 songwriters, composers, and music publishers. All music performed through the Town's various programs must be licensed to comply with music copyright laws. The Town also has music performance licenses with the Society of European Stage Authors & Composers (SESAC, Inc.) and American Society of Composers, Authors and Publishers ("ASCAP").

The performance licensing fee will be based on the Town's current population and the invoice will be sent out in December. The license will be ratified and continued from December 1, 2019 through November 30, 2020. The cost of renewing the performance license shall not exceed $3,500.00 but will be paid based on the actual invoice amount. Funds for the licensing fee will be available in Account No. CYS A 7020 47660 000 0000, *Special Events.*

Maureen A. Fitzgerald
Maureen A. Fitzgerald
Commissioner

MAF:iw
Attachment
cc: Town Attorney (+9 copies)

Meeting of October 16, 2018 Resolution No. 658-2018

WHEREAS, Maureen A. Fitzgerald, Commissioner, Department of Community and Youth Services, by memorandum dated September 27, 2018, requested Town Board authorization to renew a performance licensing agreement between the Town of Oyster Bay and Broadcast Music, Incorporated (BMI), in order to fulfill the requirement that all of the Town's music programs be licensed, at a cost not to exceed $3,500.00, from December 1, 2018 through November 30, 2019,

NOW, THEREFORE, BE IT RESOLVED, That the request as hereinabove set forth is accepted, and the Town of Oyster Bay hereby renews its performance licensing agreement with Broadcast Music, Incorporated (BMI), from December 1, 2018 through November 30, 2019, in order to fulfill the requirement that all of the Town's music programs be licensed, said agreement to be at a cost of $3,500.00, and the Comptroller is hereby authorized and directed to make payment for same upon presentation of a duly certified claim, after audit; and be it further

RESOLVED, That the funds for said payment are to be drawn from Account No. CYS A 7020 47660 000 0000.

-#-

Reviewed By
Office of Town Attorney

The foregoing resolution was declared adopted after a poll of the members of the Board; the vote being recorded as follows:

Supervisor Saladino	Aye
Councilman Muscarella	Aye
Councilman Macagnone	Aye
Councilwoman Alesia	Aye
Councilwoman Johnson	Aye
Councilman Imbroto	Aye
Councilman Hand	Aye

cc: Supervisor
Town Attorney
Comptroller
Community & Youth Services

Meeting of November 19, 2019 Resolution No. 695-2019

WHEREAS, Maureen A. Fitzgerald, Commissioner, Department of Community and Youth Services, by memorandum dated October 31, 2019, requested Town Board authorization to obtain videotaping and editing services for the Department's special events, and the Commissioner also requested approval to purchase the DVDs of said tapings, for the period covering January 1, 2020 through December 31, 2020, all of which are to be provided by EKOPLEX, Inc. d/b/a EKO Productions, 360-C Commack Road, Deer Park, NY 11729; and

Reviewed By
Office of Town Attorney

WHEREAS, the Department has conformed to Guideline 6 of the Town's Procurement Policy and services will not exceed $3,100.00,

NOW, THEREFORE, BE IT RESOLVED, That the requests as hereinabove set forth are approved, and the Town Board hereby authorizes the Supervisor or his designee to execute an agreement, with EKOPLEX, Inc. d/b/a EKO Productions, 360-C Commack Road, Deer Park, NY 11729, for the taping, editing and purchase of DVDs of special events for the Department of Community and Youth Services, for the period January 1, 2020 through December 31, 2020, at a cost not to exceed $3,100.00; and be it further

RESOLVED, That the Comptroller is hereby authorized and directed to make payment for same, upon presentation of a duly certified claim, after audit, and that the funds for said payment are to be drawn from Account No. CYS A 7020 47660 000 0000.

-#-

The foregoing resolution was declared adopted after a poll of the members of the Board; the vote being recorded as follows:

Supervisor Saladino	Aye
Councilman Muscarella	Aye
Councilman Macagnone	Aye
Councilwoman Johnson	Aye
Councilman Imbroto	Aye
Councilman Hand	Aye
Councilman Labriola	Aye

11

695

TOWN OF OYSTER BAY

Inter-Departmental Memorandum

October 31, 2019

TO: Memorandum Docket

FROM: Maureen A. Fitzgerald, Commissioner
Department of Community and Youth Services

SUBJECT: Video Taping, Editing, and DVD Purchasing Services

The Department of Community and Youth Services is requesting Town Board authorization for videotaping and editing services for the Department's special events. The Department is also requesting approval to purchase the DVD's, of said tapings. Town Board Resolution No. 735-2018, dated November 20, 2018, authorized the services for the period beginning January 1, 2019 through December 31, 2019.

All services would be provided by EKOPLEX, Incorporated D/B/A EKO Productions, 360-C Commack Road, Deer Park, NY for the period covering January 1, 2020 through December 31, 2020. The cost of these services will not exceed $3,100.00. Funds for these services will be available in Account CYS A 7020 47660 000 0000, *Special Events.*

Therefore it is respectfully requested that the Town Board authorize the taping, editing and purchase of DVD's for the Department's special events as provided by EKOPLEX, Incorporated.

Maureen A. Fitzgerald
Commissioner

MAF:iw
Attachment
cc: Town Attorney (+9 copies)

VOID
DATED
KEEPING OTH
UNLESS
07/2000
LIDATED
FINANCE

Tax Law.
e.

Meeting of November 20, 2018 Resolution No.735-2018

Reviewed By
Office of Town Attorney

WHEREAS, Maureen A. Fitzgerald, Commissioner, Department of Community and Youth Services, by memorandum dated November 1, 2018, requested Town Board authorization to obtain videotaping and editing services for the Department's special events, and the Commissioner also requested approval to purchase the DVDs, of said tapings, for the period covering January 1, 2019 through December 31, 2019, all of which are to be provided by EKO Productions, Incorporated, 360-C Commack Road, Deer Park, NY 11729; and

WHEREAS, the Department has conformed to Guideline 6 of the Town's Procurement Policy and services will not exceed $3,100.00,

NOW, THEREFORE, BE IT RESOLVED, That the request as hereinabove set forth is approved, and the Town Board hereby authorizes the Supervisor or his designee to execute an agreement, with EKO Productions, Inc., 360-C Commack Road, Deer Park, NY 11729, for the taping, editing and purchase of DVDs of special events for the Department of Community and Youth Services, for the period January 1, 2019 through December 31, 2019, at a cost not to exceed $3,100.00; and be it further

RESOLVED, That the Comptroller is hereby authorized and directed to make payment for same, upon presentation of a duly certified claim, after audit, and that the funds for said payment are to be drawn from Account No. CYS A 7020 47660 000 0000.

-#-

The foregoing resolution was declared adopted after a poll of the members of the Board; the vote being recorded as follows:

Supervisor Saladino	Aye
Councilman Muscarella	Aye
Councilman Macagnone	Aye
Councilwoman Alesia	Absent
Councilwoman Johnson	Aye
Councilman Imbroto	Aye
Councilman Hand	Aye

cc: Supervisor
Town Attorney
Comptroller
Community & Youth Services

Reviewed By
Office of Town Attorney

WHEREAS, Dori Yakuel has offered to donate a memorial plaque and bench to be placed in Merry Lane Park, Jericho, (J2), in memory of Shlomo Grand; and

WHEREAS, the value of the plaque and bench is estimated to be $830.00, and the monies will be collected and deposited into Account No. PKS A 0001 02770 590 0000 and used to purchase the bench and plaque; and

WHEREAS, Joseph G. Pinto, Commissioner, Department of Parks, by memorandum dated October 29, 2019, has recommended that the Town accept said donation,

NOW, THEREFORE, BE IT RESOLVED, That the recommendation as hereinabove set forth is accepted, and the Town hereby accepts the donation of $830.00 from Dori Yakuel for a memorial plaque and bench to be placed in Merry Lane Park, Jericho, (J2), in memory of Shlomo Grand.

-#-

The foregoing resolution was declared adopted after a poll of the members of the Board; the vote being recorded as follows:

Supervisor Saladino	Aye
Councilman Muscarella	Aye
Councilman Macagnone	Aye
Councilwoman Johnson	Aye
Councilman Imbroto	Aye
Councilman Hand	Aye
Councilman Labriola	Aye

Town of Oyster Bay
Inter-Departmental Memo

TO: Memorandum Docket

FROM: Joseph G. Pinto, Commissioner of Parks

SUBJECT: Memorial Plaque and Bench

DATE: October 29, 2019

The Department of Parks has received a request from Dori Yakuel (letter attached) requesting to donate a memorial plaque and bench to be placed in Merry Lane Park (J2) in memory of Shlomo Grand.

The Department of Parks has reviewed this request and concurs this will be a fitting tribute.

The plaque and bench will be purchased by Dori Yakuel and donated to the Parks Department. The value of the plaque and bench are estimated to be $830.00. Town Board approval is requested on behalf of Dori Yakuel. The monies will be collected in account PKS A 0001 02770 590 0000.

Joseph G. Pinto
COMMISIONER OF PARKS

JGP/dc
C: Town Attorney (original +9 copies)
ATTACHMENT

Diann Codispodo

From: dyakuel@gmail.com
Sent: Wednesday, October 30, 2019 6:11 PM
To: Diann Codispodo
Subject: Re: Memorial plaques and benches

My name is Dori Yakuel and I would like to donate a new bench and an 8x6 plaque at Merry Lane Park (J2) in honor of my father Shlomo Grand. My parents lived in Hazelwood Drive for 35 years and took us to the park all the time when we were little. My mother had eye problems so she couldn't drive. The Merry lane park was such a big part of our childhood because she was able to walk with me and my two sisters there every day to play. Our dad would play soccer with us in the park. Having a new beautiful bench at the park would be such a great way to honor our parents and the beautiful childhood we had here in Jericho. Thank you for your consideration.

Dori Yakuel

[redacted]

On Oct 10, 2019, at 4:03 PM, Diann Codispodo <dcodispodo@oysterbay-ny.gov> wrote:

Hi Dori, I'm sorry to hear about the passing of your dad. Below are the guidelines and the prices for the benches and the plaques.

the guidelines and process for the plaques are as follows:

8x4 $350.00 4 lines top to bottom
8x6 $380.00 5 lines top to bottom

Both have 24 characters left to right.

If you want to buy a new bench the prices are:
8x4 with bench $800.00
8x6 with bench $830.00

Please email me a request letter that includes your name , the park you would like it placed, what you would like to donate (specifically), and who the honorees are.
While we are waiting for the approval you can work on the wording that you would like on the plaque.

Any other questions you can call or email me. Bear in mind that I am only here part-time.
Have a great day,
Diann

PS I did receive your request letter but can you please just be specific as far as what you want to donate (bench and a plaque) thank you!

Reviewed By
Office of Town Attorney

WHEREAS, Frank V. Sammartano, Commissioner, Department of Intergovernmental Affairs, by memorandum dated November 4, 2019, advised that the Locust Valley Fire District is seeking to submit a grant application to the Federal Emergency Management Agency's Assistance to Firefighters Grant Program, which must be submitted through the Federal System for Award Management ("SAM") using a Data Universal Numbering System ("DUNS") identification; and

WHEREAS, the Locust Valley Fire District is not eligible to receive an individual DUNS identification because it receives funding through the Town and is presently identified under a DUNS identification assigned to "Town of Oyster Bay, doing business as Locust Valley Fire District;" and

WHEREAS, the Locust Valley Fire District seeks the Town's authorization to use the existing DUNS identification in connection with their grant application to SAM; and

WHEREAS, Commissioner Sammartano, by the aforementioned memorandum, seeks Town Board authorization for Colin Bell, Deputy Commissioner, to grant permission to the Locust Valley Fire District to utilize the DUNS identification assigned to "Town of Oyster Bay, doing business as Locust Valley Fire District" for the purpose of facilitating the Fire District's creation of a SAM account and filing of its Firefighters Grant Program application,

NOW, THEREFORE, BE IT RESOLVED, That the request as hereinabove set forth is accepted and approved, and Colin Bell, Deputy Commissioner, Department of Intergovernmental Affairs, is authorized to grant permission to the Locust Valley Fire District to utilize the "Town of Oyster Bay, doing business as Locust Valley Fire District" DUNS identification for the purpose of creating a SAM account and filing its Firefighters Grant Program application.

-#-

The foregoing resolution was declared adopted after a poll of the members of the Board; the vote being recorded as follows:

Supervisor Saladino	Aye
Councilman Muscarella	Aye
Councilman Macagnone	Aye
Councilwoman Johnson	Aye
Councilman Imbroto	Aye
Councilman Hand	Aye
Councilman Labriola	Aye

14

TOWN OF OYSTER BAY

INTER-DEPARTMENTAL MEMO

TO: MEMORANDUM DOCKET

FROM: FRANK V. SAMMARTANO, COMMISSIONER
INTERGOVERNMENTAL AFFAIRS

DATE: NOVEMBER 4, 2019

SUBJECT: DUNS AUHTORIZATION: LOCUST VALLEY FIRE DISTRICT

The Locust Valley Fire District wishes to prepare a grant application to the Federal Emergency Management Agency's, Assistance to Firefighters Grant Program. In order to apply for this federal grant funding LVFD must create an account with the federal System for Award Management (SAM) ; an online portal designed to assist with the pursuit and administration of federal grant awards. LVFD's creation of a SAM account requires that they provide a Data Universal Numbering System (DUNS) Number - a nine-digit entity identification number issued by DUN & Bradstreet.

Locust Valley Fire District receives funding through tax dollars collected by Town of Oyster Bay. As such, LVFD do not qualify to receive a DUNS Number specific to their organization. Rather, they are presently identified under a DUNS Number assigned to 'Town of Oyster Bay; Doing Business As Locust Valley Fire District'.

At this time LVFD wish to create a SAM Account thereby allowing them to apply for federal funding. LVFD require authorization from the Town to utilize the DUNS Number assigned to 'Town of Oyster Bay; Doing Business As Locust Valley Fire District' in order to create a SAM Account. As administrator of the Town's federal grants Colin Bell, Deputy Commissioner, Department of Intergovernmental Affairs is registered as an Entity Administrator under the Town's System for Award Management. As such, Colin Bell has the ability to authorize LVFD's usage of the DUNS Number for the purpose of creating LVFD's own SAM Account.

It is therefore respectfully requested that Colin Bell be authorized to grant permission to the Locust Valley Fire District to utilize the DUNS Number assigned to 'Town of Oyster Bay, Doing Business As Locust Valley Fire District' for the purpose of LVFD creating a federal System for Award Management account; in turn allowing for LVFD to apply for federal funding through the FEMA Assistance to Firefighters Grant Program.

Frank V. Sammartano
Commissioner

cc: Town Attorney w/9 copies

LOCUST VALLEY FIRE DISTRICT
BOARD OF FIRE COMMISSIONERS
LOCUST VALLEY, NEW YORK 11560
516 — 676-0560

Deputy Commissioner Colin Bell
Department of Intergovernmental Affairs
Town of Oyster Bay
977 Hicksville Road
Massapequa, NY 11758

Dear Mr. Bell,

The Locust Valley Fire District is submitting a grant application under the Assistance to Firefighters Grant Program. As such, the District must register on the federal website SAM.gov which is the System for Award Management.

The registration requires a valid DUNS Number be provided for the applicant. Dun & Bradstreet advised that the DUNS number on file for the District is 003799129, for which the Town of Oyster Bay is the legal business name. The Locust Valley Fire District is listed as a DBA of the Town. Dun & Bradstreet clarified this by explaining that the District receives funding through tax money collected by the Town of Oyster Bay and thereby operates financially under the umbrella of the Town.

The Locust Valley Fire District is requesting that authorization be given by the administrator of the DUNS account for the District to use DUNS number 003799129 for grant application purposes.

Thank you for your assistance in this matter.

Dominick Scaperotta
Chairman of the Board
Locust Valley Fire District

WHEREAS, Elizabeth L. Maccarone, Commissioner, Department of Planning and Development, by memorandum dated November 1, 2019, recommended that the Town Board authorize payment of a refund in the amount of $750.00 to Mr. Matt Falcetta, for the payment of a time extension fee under Building Permit Number 2589/R19000239, as a fee was later paid under Building Permit Number R19004606 on October 10, 2019, which superseded and replaced Permit Number 2589/R19000239,

Reviewed By
Office of Town Attorney

NOW, THEREFORE, BE IT RESOLVED, That the recommendation as hereinabove set forth is accepted and approved, and the Town Board authorizes payment of a refund to Mr. Matt Falcetta, in the amount of $750.00, and payment of said refund is to be made upon presentation of a duly certified claim, after audit by the Office of the Comptroller; and be it further

RESOLVED, That funds for said payment are to be drawn from Account No. PAD B 0001 02555 000 0000.

-#-

The foregoing resolution was declared adopted after a poll of the members of the Board; the vote being recorded as follows:

Supervisor Saladino	Aye
Councilman Muscarella	Aye
Councilman Macagnone	Aye
Councilwoman Johnson	Aye
Councilman Imbroto	Aye
Councilman Hand	Aye
Councilman Labriola	Aye

TOWN OF OYSTER BAY

INTER-DEPARTMENTAL MEMO

November 1, 2019

TO: MEMORANDUM DOCKET

FROM: OFFICE OF THE COMMISSIONER
DEPARTMENT OF PLANNING AND DEVELOPMENT

SUBJECT: RESIDENT REFUND – MATT FALCETTA

Pursuant to the Code of the Town of Oyster Bay, this Department granted an extension of time at the cost of $750.00 for Building Permit Number 2589 dated March 19, 1953 for an enclosed rear porch when it was reissued as Building Permit R19000239. A building inspector determined that the rear porch had been enclosed and constructed larger than described on permit R19000239. To reflect these changes, Building Permit Number R19004606 was issued on October 10, 2019, in order to replace and supersede Building Permit R19000239.

Therefore, in light of the aforementioned facts, a seven hundred fifty dollar ($750.00) refund for the building permit extension of time fee associated with Building Permit Number R19000239 should be refunded to Mr. Matt Falcetta, 624 Jerusalem Avenue, Uniondale, New York 11553 under account number PAD B 0001 02555 000 0000.

Elizabeth L. Maccarone

ELIZABETH L. MACCARONE
COMMISSIONER

ELM:km
cc: Town Attorney (w/9 copies)

TOWN OF OYSTER BAY
CLAIM
AUDREY AVENUE, OYSTER BAY, NEW YORK 11771

TAXPAYER IDENTIFICATION NUMBER
FEDERAL ID # ☐ SOCIAL SECURITY # ☐

CLAIMANT'S NAME: 350 Hempstead Ave Inc.	CONTRACT #	ORDER #
CLAIMANT'S ADDRESS: 624 Jerusalem Ave, Uniondale, NY 11553	CONTRACT NAME	
TOWN DEPARTMENT: Building	CLAIMANT INVOICE #	RESO #

FOLLOW INSTRUCTIONS ON REVERSE SIDE THEN RETURN CLAIM AND INVOICES TO DEPARTMENT RECEIVING MATERIALS OR SERVICES

DETAILED DESCRIPTION OF MATERIALS OR SERVICES

DATE	DESCRIPTION	UNIT PRICE	TOTAL
10/14/19	Refund of Building permit activation	750.00	750.00
	from 1953 - This Application was		
	replaced by Building permit # 19004606		
	PREPARED BY: KAMILA MATULIK		

THE BELOW CERTIFICATION MUST BE PROPERLY FILLED OUT BY THE CLAIMANT

TOTAL AMOUNT	750 -
CASH DISCOUNT %	—
NET AMOUNT	750.00

I HEREBY CERTIFY the above articles were sold and delivered and/or the above service rendered to the Town of Oyster Bay on the dates and for the prices or amounts billed; that the above bill is just, true and correct; that no part thereof has been paid except as stated therein and that the balance there stated in the amount of no part thereof has been paid except as stated therein and that the balance there in stated in the amount of Seven hundred & fifty is actually due and owing, and that taxes from which the Town of Oyster Bay is exempt are excluded therefrom.

CLAIMANT FURTHER CERTIFIES that the unit prices charged herein are not higher than those charged to any governmental or commercial consumer for like deliveries.

Date 10/14/19

Signature Matthew Falcette Title Mgr

Print or type name Matthew Falcette Name of Company 350 Hempstead Ave Inc

I HEARBY APPROVE this claim form for the sum of SEVEN HUNDRED AND FIFTY for the services, disbursements and materials herein indicated which were actually performed and were for the Town of Oyster Bay.

Signature _____ Title _____ Date _____

Department PLANNING + DEVELOPMENT Account _____

350 Hempstead Ave Inc
Matthew Falcetta
624 Jerusalem Ave
Uniondale, NY, 11553
516 255 9595

October 7, 2019

Town of Oyster Bay
Tim Zike
Deputy Commissioner
74 Audrey Ave,
Oyster Bay, NY 11771

RE: [redacted]

Mr. Zike,

I purchase the home above with an open building permit #2583 from 1953. I was told the fee to reactivate this was $ 750.00 of which I paid. Once the inspecter measured the enclosed porch it was discovered that the enclosure was bigger than the original layout. I was advised that a variance and a new permit must be obtained. If this was done and approved the original fee of $750.00 would be returned. Happily, the variance has been approved and I am currently waiting on the final C/O.

I am writing to you to seek instructions on how to obtain this refund.

Sincerely

Matt Falcetta

Matt Falcetta

Ingrahm Divison Checking: Account Activity Transaction Details

Check number:	00000000[redacted]
Post date:	01/23/2019
Amount:	-750.00
Type:	Check
Description:	Check
Merchant name:	E
Transaction category:	Cash, Checks & Misc: Checks

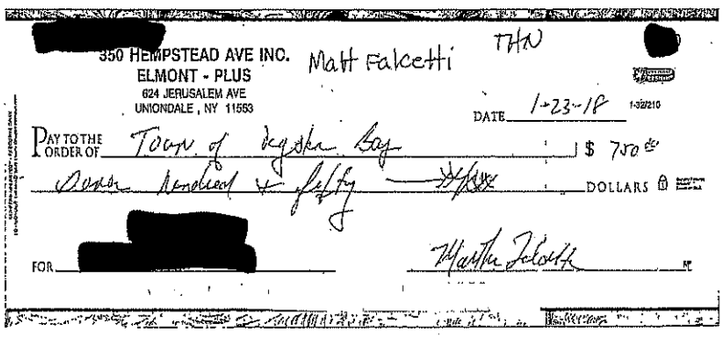
[redacted] 350 HEMPSTEAD AVE INC. Matt Falcetti THN [redacted]
ELMONT - PLUS
624 JERUSALEM AVE
UNIONDALE, NY 11553
DATE 1-23-18 1-32/210
PAY TO THE ORDER OF Town of Hyde Park $ 750.00
Seven hundred & fifty DOLLARS
FOR [redacted] Martin Foloth

Ingrahm Divison Checking: Account Activity Transaction Details

Check number:	00000000[redacted]
Post date:	01/23/2019
Amount:	-750.00
Type:	Check
Description:	Check
Merchant name:	E
Transaction category:	Cash, Checks & Misc: Checks

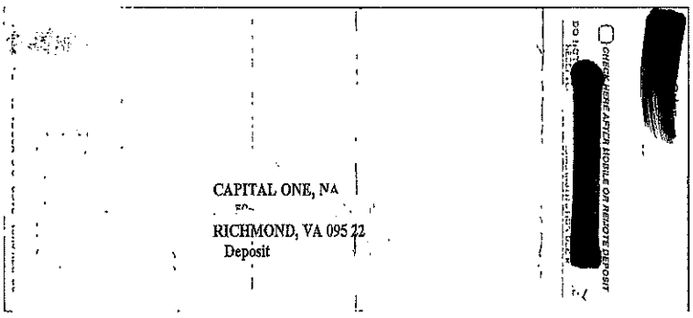

TOWN OF OYSTER BAY

ITEM 1 OF 1

PERMIT RECEIPT

OPERATOR: sgerber
COPY # : 1

Sec:65 Twp:Oyster B Rng: Sub: Blk:49 Lot:49
SBL .....: 65-49-49

DATE ISSUED.....: 01/23/2019
RECEIPT #.....: 01000450272
REFERENCE ID # ...: 19010345

Permit Num .....: R19000239
SITE ADDRESS .....: 173 DIVISION AVE
SUBDIVISION .....:
CITY .....: MASSAPEQUA
IMPACT AREA .....:

OWNER .....: KATHLEEN WISKER LIFE ESTATE
ADDRESS .....: 173 DIVISION AVENUE
CITY/STATE/ZIP ...: MASSAPEQUA, NY 11758

RECEIVED FROM ....: 350 HEMPSTEAD AVE IN
CONTRACTOR .....: MAINTAIN LIC # MAINTAIN
COMPANY .....: MAINTAIN
ADDRESS .....:
CITY/STATE/ZIP ...: ,
TELEPHONE .....:

FEE ID	UNIT	QUANTITY	AMOUNT	PD-TO-DT	THIS REC	NEW BAL
B-REISSUER FLAT RATE		1.00	750.00	0.00	750.00	0.00
TOTAL PERMIT :			750.00	0.00	750.00	0.00

METHOD OF PAYMENT	AMOUNT	REFERENCE NUMBER
CHECK	750.00	980
TOTAL RECEIPT :	750.00	

Town of Oyster Bay
Department of Planning and Development
Phone 516-624-6200

74 Audrey Avenue
Town Hall, Oyster Bay, NY 11771
Fax 516-624-6240

School District	Section/Block/Lot	Zone	Application No.	ZBA Number	ZBA Date	Receipt No.
Massapequa	65-49-49	R1-7	19010345			01000450272

Permittee	KATHLEEN WISKER LIFE ESTATE 173 DIVISION AVENUE MASSAPEQUA NY 11758 (631) 403-4142	Contractor	MAINTAIN
Property Owner	KATHLEEN WISKER LIFE ESTATE 173 DIVISION AVENUE MASSAPEQUA, NY 11758 (631) 403-4142	Plumber	
		Electrician	

Address of Actual Construction

173 DIVISION AVE MASSAPEQUA, NY 11758		Tenant	
Permission Granted for the		Estimated Cost of Construction	$0

Reissue of permit 2589 dated 3/19/1953. Enclosed rear porch 8'6"" x 15"".

This Permit has been issued specifically for the construction or maintenance of the improvement listed hereon. The issuance of this Permit shall not be deemed to be an acknowledgement by the Town of Oyster Bay as to the legality of any other improvements to the subject premises. It is specifically understood that the issuance of a Certificate of Occupancy by the Town of Oyster Bay for the improvement listed hereon shall be conditioned upon the issuance of a Building Permit and Certificate of Occupancy for any and all other improvements to the subject premises.

A certificate from an approved Electrical Inspection Co. is to be placed on file prior to Issuance of a Certificate of Occupancy/Approval/Completion

Located On	Side Of	Feet	Of		Post Office
					MASSAPEQUA

DESCRIPTION	FEE	PAID	BALANCE
Other	750.00	750.00	0.00
*** FEE TOTALS ***	750.00	750.00	0.00

TOTAL PAID AFTER APPLICATION FEE APPLIED: $750.00

Occupancy of this new building or addition or alteration prior to the issuance of a Certificate of Occupancy will be considered a violation of the Code of the Town of Oyster Bay. Prompt notification by the various contractors for inspection of their various parts of the work will avoid delay in the issuance of the Certificated of Occupancy. Permit and approved plans must be posted on the job site, visual to public inspection, until completion of the work and inspections.

Changes regardless of size from the stamped approval plans must be submitted to the Department of Planning and Development and approved before changes are made. Approved plans must be retained on the job and available to inspection at all times.

INSPECTIONS

There are numerous inspection requirements that vary according to the type of structure built or maintained. Some but not all of the required inspections follow:

BUILDING INSPECTIONS:

*Demolition Inspections – Check with Building Division.
*Concrete Certifications.
*Soil Conditions – before footings and foundations are poured.
*Forms for footings, keyways and foundations including rebar.
*Waterproofing, membrane and insulating
*Foundations and/or slabs.
*Framing – wood or steel before mechanicals.
*Framing after mechanicals and before insulating.
*Insulation inspection – before closing.
*Rough enclosed.
*Final Inspection(s).

PLUMBING INSPECTIONS

*Underground plumbing – before backfilling.
*Rough plumbing – before closed up and ready for test.
*Final inspection when all fixtures are set.
*Sewer connection – spur tie-in.
*Sanitary systems. (Excavation/Construction).
*Installation or replacement of burners. (oil, gas, electric).
*All Tanks – inground or above. (Check with Building Division for required testing and in Testing and inspections).
*Pressure tests are required for any natural or propane gas installation, Alteration or replacement
*Hydrostatic pressure testing must be witnessed by a plumbing inspector For all fire sprinkler systems.

DRAINAGE, SITE WORK, & RETAINING WALLS:

Contact Planning and Development site engineer.

ALL PERMITS ISSUED IN CONJUNCTION WITH SITE PLAN REVIEW

Please be advised that a Certificate of Occupancy will not be issued for this project until all of the required landscaping has been installed and inspected, or a performance bond in the amount of $_____ has been posted with the Town of Oyster Bay

Date Issued:	01/23/2019	Work Must Start By:

CO must be issued by 04/24/2019 or permit will expire unless renewed prior to expiration.

Permittee's copy of approved plans must be available at the site for all inspections

Elizabeth L. Maccarone

Commissioner, Department of Planning and Development

(516) 624-6200 | Fax: (516) 624-6240

Building Inspector's Report

Date: 1/28/19 Time: ____AM ____PM I have reviewed ( ) previous reports.

Zone R1-7
Sec. 65
Blk. 49
Lot(s) 49

Owner: WISKER
Address: 173 DIVISION AVE
Telephone: MASSAPEQUA

Contractor: ____
Address: ____
Telephone: ____

Permit #(s)	Type	Date Issued	Expiration Date
R19000239	REISSUE 2589 3/19/83	ENCLOSED REAR	PORCH 8'6" x 15'

Type of Inspection - ____Excavation ____Footing ____Foundation ____Rough Frame ____Final Frame ____Insulation ____Final ____Other ____

PLEASE NOTE – A field inspection has revealed that the following items are necessary:

To Continue Work:
- ____No One Was Home
- ✓ Call For Inspection – (516) 624-6222
- ____No Building Plans on Job
- ✓ Need Amended Building Plans or new permit
- ____Work Does Not Conform to Building Code
- ____Work Does Not Conform to Approved Building Plans

To Obtain a Certificate of Occupancy:
- ____Must Obtain Electrical Certificate From Approved Electrical Inspection Service For: ____
- ____Must Submit Updated Property Survey
- ____Must Obtain Plumbing Approval
- ____Must Obtain Permit For: ____

The items checked below have been observed during the course of the field inspection and require permits. Failure to obtain permits will result in the delay of the issuance of a Certificate of Occupancy/Compliance.

____Cellar Entrance	____Roofed-Over Patio/Deck	____Solar Heat
____Deck	____Second Apartment/Dwelling	____A/C Unit
____Dock	____Shed	____Dormers
____Enclosed Porch	____Swimming Pool	____Other Structures
____Extension	____Swimming Pool Fence	____
____Fence	____Swimming Pool Heater	____
____Fireplace	____Swimming Pool Filter	____
____Garage	____Swimming Pool Accessories	____
____Garage/Converted	____Swimming Pool Raised Deck	
____Interior Alterations	____Skylight	
____Retaining Wall/Bulkhead		

Comments/Observations/Information: Size or scope of permit doesn't match work
Work appears to be original porch and an enclosed patio with sliding door and ~~[illegible]~~ picture window in enclosed porch not original appears less than 10 yrs old

PLEASE NOTE – All inspections approved are subject to review of file and certification requirements. You will be notified if any further documentation is required.

Inspection Approved: ____Yes ✓ No ____Conditional Approval (See Comments)
Report to Contractor: ✓ In Person ____Left on Premises
Report to Homeowner: ____In Person ____By Mail
N.O.V. #: ____ **Date Due:** ____ **Summons #:** ____ **Date Returnable:** ____

Received By: [signature] **Inspector's Signature:** [signature]
Inspector's Extension: (516) 624-6281

THIS IS A COPY. THE ORIGINAL IS ON FILE IN THE BUILDING DIVISION.

Town of Oyster Bay
Department of Planning and Development
Phone 516-624-6200

74 Audrey Avenue
Town Hall, Oyster Bay, NY 11771
Fax 516-624-6240

School District	Section/Block/Lot	Zone	Application No.	ZBA Number	ZBA Date	Receipt No.
Massapequa	65-49-49	R1-7	19020509	19-425	08-30-2019	01000458275

Permittee	350 HEMPSTEAD AVE INC 624 JERUSALEM AVE UNIONDALE NY 11553 (516) 250-9999	Contractor	MAINTAIN
Property Owner	350 HEMPSTEAD AVE INC 624 JERUSALEM AVE UNIONDALE, NY 11553 (516) 250-9999	Plumber	FJR PLUMBING & HEATING SPECIAL 1005 CHURCH STREET BALDWIN NY 11510 516-867-6729
		Electrician	WAG ENTERPRISES LTD 44 ISLAND PARK PLACE ISLAND PARK NY 11558 (516) 796-1206

Address of Actual Construction

173 DIVISION AVE MASSAPEQUA, NY 11758		Tenant
Permission Granted for the	MAINTENANCE OF	Estimated Cost of Construction $33128

MAINTENANCE OF A 9'-1"" X 6'-8"" (60 SF) ONE (1) STORY ADDITION, A 4' X 3' (12 SF) ONE (1) STORY ADDITION, ONE (1) 8' WIDE BOW WINDOW, A 15'-1"" X 9'-1"" (137 SF) PORCH CONVERSION TO HABITABLE SPACE AS PER PLANS BY IRVING M. KUZNITZ LPE 2/13/19.
INSTALL ONE (1) PLUMBING FIXTURE (1-WM) AS PER CODE.
ALL WORK TO CONPLY WITH T.O.B. PLAN DATED 9-3-19.
ZONING REVIEW - MUST COMPLY WITH BOARD OF APPEALS DECISION 19-425 DATED 8-30-19. THE BUILDING DIVISION REQUIRES AN ORIGINAL UPDATED SURVEY OF THE PROPERTY, STAMPED AND SEALED BY A LICENSED SURVEYOR.

This Permit has been issued specifically for the construction or maintenance of the improvement listed hereon. The issuance of this Permit shall not be deemed to be an acknowledgement by the Town of Oyster Bay as to the legality of any other improvements to the subject premises. It is specifically understood that the issuance of a Certificate of Occupancy by the Town of Oyster Bay for the improvement listed hereon shall be conditioned upon the issuance of a Building Permit and Certificate of Occupancy for any and all other improvements to the subject premises.

A certificate from an approved Electrical Inspection Co. is to be placed on file prior to issuance of a Certificate of Occupancy/Approval/Completion

Located On	Side Of	Feet	Of		Post Office
					MASSAPEQUA

DESCRIPTION	FEE	PAID	BALANCE
APP FEE	100.00	100.00	0.00
BLDG	1,488.00	1,488.00	0.00
CA	105.00	105.00	0.00
CO	303.00	303.00	0.00
PLUMBING	300.00	300.00	0.00
*** FEE TOTALS ***	2,296.00	2,296.00	0.00

TOTAL PAID AFTER APPLICATION FEE APPLIED: $2,096.00

Occupancy of this new building or addition or alteration prior to the issuance of a Certificate of Occupancy will be considered a violation of the Code of the Town of Oyster Bay. Prompt notification by the various contractors for inspection of their various parts of the work will avoid delay in the issuance of the Certificated of Occupancy. Permit and approved plans must be posted on the job site, visual to public inspection, until completion of the work and inspections.

Changes regardless of size from the stamped approval plans must be submitted to the Department of Planning and Development and approved before changes are made. Approved plans must be retained on the job and available to inspection at all times.

INSPECTIONS

There are numerous inspection requirements that vary according to the type of structure built or maintained. Some but not all of the required inspections follow:

BUILDING INSPECTIONS:

*Demolition Inspections – Check with Building Division.
*Concrete Certifications.
*Soil Conditions – before footings and foundations are poured.
*Forms for footings, keyways and foundations including rebar.
*Waterproofing, membrane and insulating
*Foundations and/or slabs.
*Framing – wood or steel before mechanicals.
*Framing after mechanicals and before insulating.
*Insulation inspection – before closing.
*Rough enclosed.
*Final Inspection(s).

PLUMBING INSPECTIONS

*Underground plumbing – before backfilling.
*Rough plumbing – before closed up and ready for test.
*Final inspection when all fixtures are set.
*Sewer connection – spur tie-in.
*Sanitary systems. (Excavation/Construction).
*Installation or replacement of burners. (oil, gas, electric).
*All Tanks – inground or above. (Check with Building Division for required testing and in Testing and Inspections).
*Pressure tests are required for any natural or propane gas installation, Alteration or replacement
*Hydrostatic pressure testing must be witnessed by a plumbing inspector For all fire sprinkler systems.

DRAINAGE, SITE WORK, & RETAINING WALLS:

Contact Planning and Development site engineer.

ALL PERMITS ISSUED IN CONJUNCTION WITH SITE PLAN REVIEW

Please be advised that a Certificate of Occupancy will not be issued for this project until all of the required landscaping has been installed and inspected, or a performance bond in the amount of $_____ has been posted with the Town of Oyster Bay

Date Issued:	10/10/2019	Work Must Start By:	10/10/2019

CO must be issued by 01/08/2020 or permit will expire unless renewed prior to expiration.

Permittee's copy of approved plans must be available at the site for all inspections

Elizabeth L. Maccarone

Commissioner, Department of Planning and Development

Reviewed By
Office of Town Attorney

WHEREAS, BSL NY DEVELOPMENT LLC, fee owner, has submitted an application to the Department of Planning and Development for Site Plan Approval to amend a Site Plan previously approved by Resolution No. 605-2016, adopted on October 18, 2016, in order to replace the existing natural landscape buffer along a portion of the southern property line with thirty (30) five (5) foot tall Nigra Arborvitae, on premises located at 900 Woodbury Road, Woodbury, Town of Oyster Bay, County of Nassau, State of New York, and described as Section 12, Block 527, Lot 24 on the Land and Tax Map of Nassau County; and

WHEREAS, Elizabeth L. Maccarone, Commissioner, Department of Planning and Development, by memorandum dated November 1, 2019, advised that the Department of Planning and Development has reviewed the following one (1) plan prepared by Henry P. Sombke, R.L.A., Steven Dubner Landscaping, Inc., Dix Hills:

SHEET NO.	TITLE	PREPARED BY	DATE
L-100	Landscape Plan	Henry P. Sombke, R.L.A.	10/08/19

WHEREAS, said Commissioner further reported that the plan submitted, complies with the standards set forth in the Code of the Town of Oyster Bay, Section 246.6, Site Plan Review; and

NOW, THEREFORE, BE IT RESOLVED, That in accordance with the memorandum of Elizabeth L. Maccarone, Commissioner, Department of Planning and Development, dated November 1, 2019, the one (1) plan prepared by Henry P. Sombke, R.L.A., is hereby approved; and be it further

RESOLVED, That the application of BSL NY DEVELOPMENT LLC, fee owner, for Site Plan Approval to amend a Site Plan previously approved by Resolution No. 605-2016, adopted on October 18, 2016, in order to replace the existing natural landscape buffer along a portion of the southern property line with thirty (30) five (5) foot tall Nigra Arborvitae, on premises located at 900 Woodbury Road, Woodbury, Town of Oyster Bay, County of Nassau, State of New York, and described as Section 12, Block 527, Lot 24 on the Land and Tax Map of Nassau County, is hereby APPROVED.

#

The foregoing resolution was declared adopted after a poll of the members of the Board; the vote being recorded as follows:

Supervisor Saladino	Aye
Councilman Muscarella	Aye
Councilman Macagnone	Aye
Councilwoman Johnson	Aye
Councilman Imbroto	Aye
Councilman Hand	Aye
Councilman Labriola	Aye

19

Town of Oyster Bay

Inter-Departmental Memo

TO: **MEMORANDUM DOCKET**

FROM: **ELIZABETH L. MACCARONE, COMMISSIONER**
DEPARTMENT OF PLANNING AND DEVELOPMENT

DATE: **NOVEMBER 1, 2019**

SUBJECT: **REQUEST FOR AMENDED SITE PLAN APPROVAL**
TOWN BOARD RESOLUTION NUMBER 605-2016
SECTION 12, BLOCK 527, LOT 24
900 WOODBURY ROAD – WOODBURY, NEW YORK

This Department is in receipt of correspondence, dated October 31, 2019, from Henry P. Sombke, R.L.A., Steven Dubner Landscaping, Inc., on behalf of BSL NY Development, c/o Benchmark Senior Living, requesting an amended Site Plan Approval for the above referenced property.

On October 18, 2016, the Town Board approved Resolution Number 605-2016 which granted a Special Use Permit and granted Site Plan Approval for the construction of a 73,955 square foot two-story assisted living facility in a Neighborhood Business ("NB") Zoning District. According to the Declaration of Restrictive Covenants, Number 25 (copy attached), any "major" Site Plan modifications shall require Town Board approval.

The proposed amended Landscape Plan's most significant modification consists of replacing the existing natural landscape buffer along a portion of the southern property line with 30 five (5) foot tall Nigra Arborvitae. All of the existing buffer screening areas have remained the same character, size and quantity. Overall the amended Landscape Plan has more trees, shrubs and ground cover, however many these plant species have changed and been relocated since the prior approval.

One (1) amended Landscape Plan prepared by Henry P. Sombke, R.L.A., Steven Dubner Landscaping, Inc., Dix Hills, New York has been submitted for amended Site Plan Approval. The plan is as follows:

SHEET NO/TITLE		PREPARED BY	LAST REVISED
L-100	LANDSCAPE PLAN	Henry P. Sombke, R.L.A.	10/08/2019

Also submitted for your review are the following documents:

1. Letter from Henry P. Sombke, R.L.A., Steven Dubner Landscaping, Inc., dated October 31, 2019.
2. Letter from Henry P. Sombke, R.L.A., Steven Dubner Landscaping, Inc., dated August 12, 2019.
3. Letter from Elizabeth L. Maccarone, Commissioner of Planning and Development, dated August 28, 2019.

4. Letter from Scott L. Byrne, Superintendent of Planning, Department of Planning and Development, dated August 28, 2019.
5. Town Board Resolution Number 605-2016 dated October 18, 2016 along with associated Declaration of Restrictive Covenants.

This Department has reviewed the amended Landscape Plan for the above-captioned property using the standards and requirements of Chapter 246 (Zoning) of the Code of the Town of Oyster Bay. The Department's review finds that the amended Site Plans are in conformance with the guidelines of Chapter 246. Therefore, I recommend the Town Board approve the amended Landscape Plan herein enumerated in accordance with Section §246 of the Code of the Town of Oyster Bay and amend the prior Site Plan Approval granted by Town Board Resolution Number 605-2016.

Elizabeth L. Maccarone
ELIZABETH L. MACCARONE
COMMISSIONER

ELM/slb
Encls.
cc: Legislative Affairs (9 copies w/ attachments)

STEVEN DUBNER
LANDSCAPING, INC.

October 31st, 2019

Town of Oyster Bay
74 Audrey Ave
Oyster Bay, NY 11771
Attn: Commissioner Leslie Maccarone

Permit #R18001152 Benchmark Senior Living

Dear Commissioner Maccarone,

The intention of this letter is to serve as the formal request for an amended site plan on behalf of the Ownership Team; BSL NY Development, c/o Benchmark Senior Living located at 201Jones Road 3rd Floor West Waltham, MA 02451. Enclosed you will find the amended landscape plan for the above referenced project. The revisions made to the plan are in response to the comment letter dated August 28, 2019(Attached) prepared by The Superintendent of Planning, Scott Byrne. The numbered items below coincide with the bulleted items from the comment letter.

1. To replace the natural landscape buffer, an evergreen hedge of 5' tall Nigra Arborvitae will be added to the southern property line. The existing plantings will be shifted just north of the evergreen screen.
2. There are no plantings on the side of the generator for maintenance reasons. The access doors open along the whole northern and southern face of the generator.
3. (7) Shadblow Serviceberry trees will be planted in the garden area per the approved plan.
4. (2) Evergreen trees will be added to the western property line and (1) evergreen tree will be added to the eastern property line as per the revised landscape plan.
5. Low lying landscaping will be added to the front area noted on your plan. Plants will be added to the triangle between the generator, walkway and driveway. The pathway from the main entry circle to the covered porch will be added as per the approved plan.

Should you require any additional information please feel free to reach me directly at 631-777-1800.

Regards,

Steven Dubner Landscaping, Inc.

Henry Sombke, RLA

REGISTERED LANDSCAPE ARCHITECT
HENRY PAUL SOMBKE
002516
STATE OF NEW YORK

10·31·19

Cc: Jonathan Herdes
jherdes@EWHowell.com
245 Newtown Road – Suite 600 Plainview, NY 11803
Phone (516) 921-7100 x 118

140 Half Hollow Road | Dix Hills, New York 11746 T. 631.777.1800 F. 631.777.1806 | StevenDubnerLandscaping.com

STEVEN DUBNER LANDSCAPING, INC. CELEBRATING 50 YEARS Est. 1966

STEVEN DUBNER
LANDSCAPING, INC.

August 12, 2019

Town of Oyster Bay
74 Audrey Ave
Oyster Bay, NY 11771

Permit #R18001152 Benchmark Senior Living - Change of Landscape Contractor

To Whom This May Concern,

Enclosed you will find the requested change of contractor form and the revised landscape plan for the above referenced project. The revisions that were made to the plan are limited to landscape plantings. All engineering calculations, grading and drainage, notes, site layout and details shall remain the same (Please refer the plans prepared by RMS Engineering with latest revision date of December 1st, 2017). The client tasked us with enhancing the landscape design as the approved plan was too sparse. Below is an explanation of the revisions made to the landscape plan.

1. All vegetated screening buffers remained the same in character, size and quantity.
2. The approved plan called for **22** shade trees and the revised plan has **25** shade trees.
3. The approved plan had **185** total trees, the revised plan has **187**. The approved plan had **482** shrubs and the revised plan has **809** shrubs. The approved plan had **520** perennials/ground cover and the revised plan has **1,932**.

The general locations and design are similar in character to that of the previously approved plan but the plant quantities increased to provide a high quality finished product. Should you require any additional information please feel free to reach out to me directly at 631-777-1800.

Regards,

Steven Dubner Landscaping, Inc.

Henry Sombke, RLA

140 Half Hollow Road Dix Hills, New York 11746 T. 631.777.1800 F. 631.777.1806 StevenDubnerLandscaping.com

STEVEN DUBNER LANDSCAPING, INC. CELEBRATING 50 YEARS Est. 1966

Town of Oyster Bay
Department of Planning and Development
Town Hall – 74 Audrey Avenue
Oyster Bay, New York 11771
(516) 624-6200
FAX (516) 624-6240
www.oysterbaytown.com

ELIZABETH L. MACCARONE
COMMISSIONER

TIMOTHY R. ZIKE
DEPUTY COMMISSIONER

JAMES McCAFFREY
DEPUTY COMMISSIONER

August 28, 2019

Henry Sombke, R.L.A.
Steven Dubner Landscaping, Inc.
140 Half Hollow Road
Dix Hills, N.Y. 11746

Re: REVISED SITE PLANS
BENCHMARK SENIOR LIVING
900 WOODBURY ROAD, WOODBURY, N.Y. 11797
SECTION 12, BLOCK 527, LOT 24

Dear Mr. Sombke:

This Department is in receipt of your letter dated August 12, 2019 along with a revised landscape plan dated 08/09/2019 for the above referenced property.

According to Town Board Resolution Number 605-2016 dated October 18, 2016, Restrictive Covenant Number 25, in the event the declarants seek permission to make a change to the subject structure or property after the date of the granting Resolution, the Department of Planning and Development shall determine whether the proposed change is a major or minor modification. If a proposed modification is deemed minor, the Department of Planning and Development shall have final approval of same. Any major modification to said plans shall require Town Board approval. This Department has reviewed the revised Site Plan and has determined that the landscape plan, altered in its entirety, is a major modification and therefore will require Town Board approval. Satisfactory resolution of the issues outlined in the Planning Division's comment letter dated August 28, 2019, is essential to the completeness of the record and is necessary to allow the Planning Division to make a fully informed recommendation to the Commissioner of the Department of Planning and Development. Once the revised plans have satisfied the Planning Division's comments, said plans will be forwarded to the Town Board for their final approval.

Please forward all future responses and correspondence directly to the Planning Division. Should you have any questions or require additional information, please do not hesitate to contact Scott Byrne, Superintendent of Planning at (516) 624-6249.

Very truly yours,

Elizabeth L. Maccarone

ELIZABETH L. MACCARONE
COMMISSIONER
ELM/slb

cc:
Jonathan Herdes

Town of Oyster Bay
Department of Planning and Development
Town Hall – 74 Audrey Avenue
Oyster Bay, New York 11771
(516) 624-6200
FAX (516) 624-6240
www.oysterbaytown.com

ELIZABETH L. MACCARONE
COMMISSIONER

TIMOTHY R. ZIKE
DEPUTY COMMISSIONER

JAMES McCAFFREY
DEPUTY COMMISSIONER

August 28, 2019

Henry Sombke, R.L.A.
Steven Dubner Landscaping, Inc.
140 Half Hollow Road
Dix Hills, N.Y. 11746

Re: SITE INSPECTION FOR BUILDING PERMIT R18001152
BENCHMARK SENIOR LIVING
900 WOODBURY ROAD, WOODBURY, N.Y. 11797
SECTION 12, BLOCK 527, LOT 24

Dear Mr. Sombke:

During the Planning Division's site inspection, on August 26, 2019, the following was observed that needs to be addressed:

- Along the southern property line (adjacent to Lark Dr.) the entire natural landscape buffer was removed in violation of the approved Site Plan. Since this natural buffer was removed the applicant must provide a buffer screening area consisting of a 10 foot planted buffer at least five feet in height. The buffer must consist of evergreen planting with a minimum installed height of five feet in order to screen the activity on the site from the neighboring residential properties. The existing plantings in this area should be relocated just north of the buffer screening area to supplement the evergreen plantings in order to match the location on the approved Site Plan.
- There was no landscaping on the southern side of the generator.
- The seven (7) Shadblow Serviceberry trees were not planted at the garden area in accordance with the approved Site Plan.
- There were several evergreen trees missing along both side property lines.

- There were some minor inconstancies between the revised landscape plan and our inspection including a path leading to the front roofed over porch and some missing landscaping.
- The Planning Division has enclosed a marked up landscape plan in order to clearly portray the above mentioned comments.

This Department has issued a bond estimate letter, which must be satisfied prior to the issuance of a Certificate of Occupancy.

On October 18, 2016, the Town Board approved Resolution Number 605-2016 which granted the development of an assisted living facility and Site Plan Approval. This Department has determined that the modifications are "major" as indicated in this Department's letter dated August 28, 2019. Once the revised plans have satisfied the above mentioned comments, said plans will be forwarded to the Town Board for their final approval.

Please forward all future responses and correspondence directly to the Planning Division. Should you have any questions or require additional information, please do not hesitate to contact this Office at (516) 624-6249.

Very truly yours,

ELIZABETH L. MACCARONE
COMMISSIONER

SCOTT L. BYRNE
SUPERINTENDENT OF PLANNING

ELM/SLB

cc:
Jonathan Herdes

Meeting of October 18, 2016 Resolution No. 605-2016

WHEREAS, JOAN III, LLC, and JOE III, LLC, fee owners, and BSL NY DEVELOPMENT LLC, contract vendee, have petitioned the Town Board of the Town of Oyster Bay ("Town Board") for a Special Use Permit to permit the development of an assisted living facility and Site Plan Approval to permit the construction of a 73,955 square foot two-story assisted living facility in a Neighborhood Business ("NB") Zone, on premises located at 900 Woodbury Road, Woodbury, Town of Oyster Bay, County of Nassau, State of New York and described as Section 12, Block 527, Lot 24 on the Land and Tax Map of Nassau County; and

Reviewed by Office of Town Attorney

WHEREAS, a duly advertised public hearing on said Petition was held by the Town Board of the Town of Oyster Bay on March 22, 2016, at which hearing all parties interested in the subject matter and desiring to be heard were heard; and

WHEREAS, the Town Board of the Town of Oyster Bay, after having reviewed the recommendations of the Town Environmental Quality Review Commission, did, by Resolution No. 499-16, adopted on September 6, 2016, declare and find that the subject application will not have a significant effect on the environment, and the proposed actions in the Petition constitute a Negative Declaration, in accordance with the New York State Environmental Conservation Law and its applicable regulations thereon; and

WHEREAS, the Nassau County Planning Commission, by Resolution No. 10116-16, adopted on September 29, 2016, recommended local determination of said application; and

WHEREAS, the Town Board of the Town of Oyster Bay, based upon the relevant facts and circumstances presented at the public hearing, and based upon the facts and information within the personal knowledge of the members of the Town Board, finds the following: that because of the area, location, nature and character of the subject property, the below described premises are adequate and suitable for the requested use; that the granting of this application, subject to the imposition of certain covenants, restrictions and provisions, will not adversely affect the present character of the area; and the granting of this application will be compatible with the purposes and objectives of the comprehensive zoning plan of the Town of Oyster Bay; and

WHEREAS, Frederick P. Ippolito, Commissioner of the Department of Planning and Development, by memorandum dated December 7, 2015, has advised that the Department of Planning and Development has reviewed the following four (4) plans prepared by Steven Hermann Ruiz, R.A., Moseley Architects, Springfield, Virginia, and the following seventeen (17) plans prepared by Christopher W. Robinson, P.E., RMS Engineering, Huntington, NY:

SHEET NO.	TITLE		DATE
A2.0.1	OVERALL FIRST FLOOR PLAN	Steven Hermann Ruiz, R.A.	04/17/15
A2.0.2	OVERALL SECOND FLOOR PLAN	Steven Hermann Ruiz, R.A	04/17/15
A4.1.1	BUILDING ELEVATIONS	Steven Hermann Ruiz, R.A.	04/17/15
A4.1.2	BUILDING ELEVATIONS	Steven Hermann Ruiz, R.A.	04/17/15
SP-1	COVER SHEET	Christopher Robinson, P.E.	08/14/15
SP-2	SITE ALIGNMENT PLAN	Christopher Robinson, P.E.	08/14/15
SP-3	GRADING & DRAINAGE PLAN	Christopher Robinson, P.E.	08/14/15
SP-4	UTILITY PLAN	Christopher Robinson, P.E.	08/14/15

SP-5	DEMOLITION &SWPPP PLAN	Christopher Robinson, P.E.	08/14/15
SP-6	LANDSCAPE PLAN	Christopher Robinson, P.E.	08/14/15
SP-7	IRRIGATION PLAN	Christopher Robinson, P.E.	08/14/15
SP-8	CONSTRUCTION DETAILS	Christopher Robinson, P.E.	08/14/15
SP-9	CONSTRUCTION DETAILS	Christopher Robinson, P.E.	08/14/15
SP-10	DRAINAGE & UTILITY DETAILS	Christopher Robinson, P.E.	08/14/15
SP-11	SANITARY DETAILS	Christopher Robinson, P.E.	04/17/15
SP-12	WATER SERVICE DETAILS	Christopher Robinson, P.E.	08/14/15
SP-13	SWPPP DETAILS	Christopher Robinson, P.E.	08/14/15
EX-1	EXISTING CONDITIONS PLAN	Christopher Robinson, P.E.	08/14/15
PH-1	PHOTOMETRIC PLAN	Christopher Robinson, P.E.	08/14/15
Exhibit A	PHASED PARKING EXHIBIT	Christopher Robinson, P.E.	08/18/15
Exhibit B	LANDSCAPE/PARKING EXHIBIT	Christopher Robinson, P.E.	08/18/15

WHEREAS, all of the plans submitted comply with the standards set forth in the Code of the Town of Oyster Bay, Section 246.6, Site Plan Review, and recommends Town Board approval for the site plans enumerated herein,

NOW, THEREFORE, BE IT RESOLVED, That the Petition of JOAN III, LLC, and JOE III, LLC, fee owners, and BSL NY DEVELOPMENT LLC, contract vendee, for a Special Use Permit to permit the development of an assisted living facility and Site Plan Approval to permit the construction of a 73,955 square foot two-story assisted living facility in a Neighborhood Business ("NB") Zone, on premises located at 900 Woodbury Road, Woodbury, Town of Oyster Bay, County of Nassau, State of New York and described as Section 12, Block 527, Lot 24 on the Land and Tax Map of Nassau County, is hereby GRANTED, on the premises described as follows:

SCHEDULE A

ALL that certain plot, piece or parcel of land, situate, lying and being at Woodbury, Town of Oyster Bay, County of Nassau and State of New York, being more particularly bounded and described as follows:

BEGINNING at a point on the Southeasterly side of Woodbury Road (as widened) distant 100.00 feet Southwesterly from the extreme Westerly end of an arc of a curve connecting the Southwesterly side of Wren Drive and the Southeasterly side of Woodbury Road (as widened);

RUNNING THENCE South 29 degrees 51 minutes 10 seconds East, a distance of 479.76 feet;

THENCE South 60 degrees 08 minutes 50 seconds West, a distance of 241.46 feet;

THENCE North 83 degrees 07 minutes 50 seconds West, a distance of 159.29 feet;

THENCE North 29 degrees 51 minutes 10 seconds West, a distance of 344.91 feet to the Southeasterly side of Woodbury Road (as widened); and

THENCE along the Southeasterly side of Woodbury Road (as widened), North 54 degrees 01 minutes 21 seconds East, a distance of 371.26 feet to the point or place of BEGINNING.

SAID premises are known and described as Section 12, Block 527, Lot 24 on the Land and Tax Map of the County of Nassau.

RESOLVED, That the Petition herein granted is subject to voluntary covenants and restrictions imposed upon the subject premises by the Petitioner, as set forth in the written instrument attached herewith, to be duly recorded in the Office of the Clerk of Nassau County within one year of this Resolution, and the subject Petition may only become effective upon such recording; and be it further

RESOLVED, That in accordance with the memorandum of Frederick P. Ippolito, Commissioner of the Department of Planning and Development, dated December 7, 2015, the twenty-one (21) plans described herein are hereby approved.

-#-

The foregoing resolution was declared adopted after a poll of the members of the Board; the vote being recorded as follows:

Supervisor Venditto	Aye
Councilman Muscarella	Aye
Councilman Macagnone	Aye
Councilman Coschignano	Aye
Councilman Pinto	Aye
Councilwoman Alesia	Aye
Councilwoman Johnson	Aye

cc: Supervisor
Town Attorney
Comptroller (2)
Environmental Resources
Planning & Development

Reviewed By
Office of Town Attorney

DECLARATION OF RESTRICTIVE COVENANTS

JOAN III, LLC, fee owner, with a business address of 30 Rolling Drive, Brookville, New York 11545, and JOE III, LLC, fee owner, with a business address of Herricks Lane, P.O. Box 645, Jamesport, New York 11947, and BSL NY DEVELOPMENT LLC, contract vendee, with a business address of 40 William Street, Suite 350, Wellesley, Massachusetts 02481, by this declaration, dated October 18, 2016, declare as follows:

WHEREAS, JOAN III, LLC and JOE III, LLC, fee owners, and BSL NY DEVELOPMENT LLC, contract vendee, have petitioned the Town Board of the Town of Oyster Bay ("Town Board") for a Special Use Permit to permit the development of an assisted living facility and Site Plan Approval to permit the construction of a 73,955 square foot two-story assisted living facility in a Neighborhood Business ("NB") Zone, on premises located at 900 Woodbury Road, Woodbury, Town of Oyster Bay, County of Nassau, State of New York, and described as Section 12, Block 527, Lot 24 on the Land and Tax Map of Nassau County; and

WHEREAS, a duly advertised public hearing on said Petition was held by the Town Board of the Town of Oyster Bay on March 22, 2016, at which hearing all parties interested in the subject matter and desiring to be heard were heard; and

WHEREAS, the Town Board of the Town of Oyster Bay, by Resolution No. 605-2016, dated October 18, 2016, approved said application subject to the execution of a Declaration of Restrictive Covenants; and

WHEREAS, said Declarants, for the purpose of preserving the value, and in order to assure the orderly development of the below described premises in Schedule "A" herein, and for the benefit and protection of persons and property in the area, do hereby voluntarily impose the following covenants and restrictions with respect to the premises identified as being located at located at 900 Woodbury Road, Woodbury, Town of Oyster Bay, New York, which will run with the land and be binding upon said Declarants, their successors and/or assigns,

NOW, THEREFORE, said Declarants, do hereby covenant and declare as follows:

1. That there shall be no direct access between the subject premises and Lark Drive, except for emergency vehicle access if such access is required by an agency having jurisdiction in regard to same.

2. That Declarants shall investigate the on-site soil in the area beneath the existing commercial building after demolition, and that any such soil that exceeds applicable criteria of the New York State Department of Environmental Conservation ("NYSDEC") shall be excavated and properly disposed in accordance with procedures set forth in the Site Management Plan ("SMP") which has been prepared for and submitted to NYSDEC.

3. That a sub-slab vapor barrier shall be installed for the subject assisted living building.

4. That the subsurface components of a sub-slab depressurization system ("SSDS") shall be installed at the time of construction of the subject assisted living building.

5. That indoor vapor testing shall be undertaken in the subject assisted living building upon the completion of the construction of said building in accordance with standard protocols for such testing.

6. That the above-grade components of the SSDS shall be promptly installed and activated if required by NYSDEC, based on the results of the aforementioned indoor vapor testing.

7. That quarterly testing of the groundwater monitoring wells on the subject property shall continue, as required by NYSDEC.

8. That appropriate measures shall be implemented to protect the monitoring wells on the subject premises in order to ensure that said wells are accessible and functional if testing continues during construction or operation of the subject assisted living facility.

9. That the on-site monitoring wells shall be decommissioned in accordance with NYSDEC requirements at such time as NYSDEC determines that groundwater testing at the subject premises is no longer necessary.

10. That annual inspections shall be undertaken on the subject premises to evaluate the effectiveness of SMP implementation, as required by NYSDEC.

11. That there shall be strict compliance with the provisions of the environmental easement, dated May 13, 2016, executed with NYSDEC.

12. That Declarants shall assign a person to serve as the point of contact for neighboring residents in order to promptly and effectively address any issues that the community may raise in the future with respect to the proposed facility.

13. That Declarants shall implement effective measures – including, but not limited to, designated staff parking areas and valet parking as needed – to ensure that no facility-related parking occurs on adjacent neighborhood streets.

14. That Declarants shall cooperate with the Town and neighboring residents to adjust the starting and ending times of staff shifts as necessary to minimize facility-related traffic impacts on the surrounding community.

15. That Declarants shall consult with the Nassau County Department of Public Works to ascertain whether conditions at the access driveway on Woodbury Road for the subject assisted living facility warrant the installation of a new traffic signal, and shall report back to the Town regarding same.

16. That Declarants, in consultation with the Nassau County Department of Public Works, shall investigate whether an eastbound deceleration lane for right-turning vehicles is warranted at the Woodbury Road access driveway for the subject assisted living facility, and shall report back to the Town regarding same.

17. That all driveway and parking areas on the subject premises shall be paved and maintained in good repair at all times and shall be provided with proper stormwater drainage.

18. That the subject premises shall be continually policed and maintained as to be free of all papers, trash, debris or other discarded materials.

19. That all shrubs, trees and landscaping on the subject premises shall be continually maintained in good and healthy condition and replaced when necessary.

20. That any and all signs that are to be erected and maintained on the subject premises are to comply with all applicable provisions of present laws or ordinances of the Town of Oyster Bay.

21. That there shall be installed and properly maintained a fully automatic sprinkler system on the subject premises to quell fires, satisfactory to and approved by the Fire Marshal of Nassau County. Adherence to all applicable laws shall satisfy this condition.

22. That the exterior of all structures, parking areas and all other installations on the subject premises visible to the public shall be continually maintained in neat and good repair.

23. That all garbage, refuse and rubbish on the subject premises shall be placed and kept in suitable containers and disposed in accordance with applicable statutes, ordinances, and laws.

24. That all exterior lighting shall be directed onto the subject premises and no lighting is to be directed onto adjacent properties or roadways.

25. That no Certificate of Occupancy shall be issued unless and until the development of the site is in conformance with four (4) plans prepared by Steven Hermann Ruiz, R.A., Moseley Architects, Springfield, Virginia, and seventeen (17) plans prepared by Christopher W. Robinson, P.E., RMS Engineering, Huntington, NY, which plans were reviewed in accordance with Section 246-6, "Site Plan Review", of the Zoning Code of the Town of Oyster Bay, and recommended for acceptance by Frederick P. Ippolito, Commissioner of the Department of Planning and Development, by memorandum dated December 7, 2015, and approved by the Town Board of the Town of Oyster Bay, including any and all amendments that the Town Board may have required to said plans. In the event Declarants seek permission to make a change to the subject structures or property after the date of the granting resolution, the Department of Planning and Development shall determine whether the proposed change is a major or minor modification. If a proposed modification is deemed

minor, the Department of Planning and Development shall have final approval of same. Any major modifications to said plans shall require Town Board approval. The plans approved by the granting resolution are as follows:

SHEET NO.	TITLE		DATE
A2.0.1	OVERALL FIRST FLOOR PLAN	Steven Hermann Ruiz, R.A.	04/17/15
A2.0.2	OVERALL SECOND FLOOR PLAN	Steven Hermann Ruiz, R.A	04/17/15
A4.1.1	BUILDING ELEVATIONS	Steven Hermann Ruiz, R.A.	04/17/15
A4.1.2	BUILDING ELEVATIONS	Steven Hermann Ruiz, R.A.	04/17/15
SP-1	COVER SHEET	Christopher Robinson, P.E.	08/14/15
SP-2	SITE ALIGNMENT PLAN	Christopher Robinson, P.E.	08/14/15
SP-3	GRADING & DRAINAGE PLAN	Christopher Robinson, P.E.	08/14/15
SP-4	UTILITY PLAN	Christopher Robinson, P.E.	08/14/15
SP-5	DEMOLITION & SWPPP PLAN	Christopher Robinson, P.E.	08/14/15
SP-6	LANDSCAPE PLAN	Christopher Robinson, P.E.	08/14/15
SP-7	IRRIGATION PLAN	Christopher Robinson, P.E.	08/14/15
SP-8	CONSTRUCTION DETAILS	Christopher Robinson, P.E.	08/14/15
SP-9	CONSTRUCTION DETAILS	Christopher Robinson, P.E.	08/14/15
SP-10	DRAINAGE & UTILITY DETAILS	Christopher Robinson, P.E.	08/14/15
SP-11	SANITARY DETAILS	Christopher Robinson, P.E.	04/17/15
SP-12	WATER SERVICE DETAILS	Christopher Robinson, P.E.	08/14/15
SP-13	SWPPP DETAILS	Christopher Robinson, P.E.	08/14/15
EX-1	EXISTING CONDITIONS PLAN	Christopher Robinson, P.E.	08/14/15
PH-1	PHOTOMETRIC PLAN	Christopher Robinson, P.E.	08/14/15
Exhibit A	PHASED PARKING EXHIBIT	Christopher Robinson, P.E.	08/18/15
Exhibit B	LANDSCAPE/PARKING EXHIBIT	Christopher Robinson, P.E.	08/18/15

26. That there shall be strict compliance with any and all ordinances, laws, regulations and directives of the Town of Oyster Bay, the Nassau County Fire Marshal's Office, the Nassau County Department of Health and any and all other agencies or departments of the Town of Oyster Bay, the County of Nassau, the State of New York and/or the United States of America.

27. That in the event of any violation of any kind of the restrictions, covenants or provisions recited herein, or any ordinances or regulations, and failure to remedy such violation within thirty (30) days after notice by the Town to the then owner of the real estate or the current operator of the subject premises of whom the Town has been given notice, the Town shall have the right to suspend or revoke forthwith, the special use permit granted, unless a cure for such violation has been commenced or is being diligently pursued.

28. This Declaration shall be filed with the County Clerk of Nassau County and be construed with the same force and effect as a recorded document, and shall be deemed a covenant running with the land. The restrictions contained herein may be enforced by the Town Board of the Town of Oyster Bay to the same extent and with the same authority as the enforcement of a Zoning Ordinance. This Declaration shall not be modified, changed, altered

or amended except with the consent of the Town Board of the Town of Oyster Bay after a public hearing.

SCHEDULE A

ALL that certain plot, piece or parcel of land, situate, lying and being at Woodbury, Town of Oyster Bay, County of Nassau and State of New York, being more particularly bounded and described as follows:

BEGINNING at a point on the Southeasterly side of Woodbury Road (as widened) distant 100.00 feet Southwesterly from the extreme Westerly end of an arc of a curve connecting the Southwesterly side of Wren Drive and the Southeasterly side of Woodbury Road (as widened);

RUNNING THENCE South 29 degrees 51 minutes 10 seconds East, a distance of 479.76 feet;

THENCE South 60 degrees 08 minutes 50 seconds West, a distance of 241.46 feet;

THENCE North 83 degrees 07 minutes 50 seconds West, a distance of 159.29 feet;

THENCE North 29 degrees 51 minutes 10 seconds West, a distance of 344.91 feet to the Southeasterly side of Woodbury Road (as widened); and

THENCE along the Southeasterly side of Woodbury Road (as widened), North 54 degrees 01 minutes 21 seconds East, a distance of 371.26 feet to the point or place of BEGINNING.

SAID premises are known and described as Section 12, Block 527, Lot 24 on the Land and Tax Map of the County of Nassau.

IN WITNESS WHEREOF, the Declarants have hereunto set its hand and seal the day and year first above written.

JOAN III, LLC, Fee Owner

BY: Joan A. D'Auria
Joan A. D'Auria, Sole Member

STATE OF ~~NEW YORK~~ FLORIDA)
COUNTY OF ~~NASSAU~~ SARASOTA) ss.:

On the 19th day of November in the year 2016 before me, the undersigned, personally appeared JOAN D'AURIA, personally known to me or proved to me on the basis of satisfactory evidence to be the individual whose name is subscribed to the within instrument and acknowledged to me that he/she executed the same in his/her capacity(ies), and that by his/her signature on the instrument, the individual, or the person upon behalf of which the individual acted, executed the instrument.

Notary Public

NOTARY PUBLIC STATE OF FLORIDA
Raymond Mirarchi
MY COMMISSION # FF221573
EXPIRES: June 01, 2019

JOE III, LLC, Fee Owner

BY: _____
Joseph P. Lebkuecher, Jr., Sole Member

STATE OF NEW YORK)
COUNTY OF ~~NASSAU~~ SUFFOLK) ss.:

On the 15th day of November in the year 2016 before me, the undersigned, personally appeared Joseph P. Lebkuecher Jr, personally known to me or proved to me on the basis of satisfactory evidence to be the individual whose name is subscribed to the within instrument and acknowledged to me that he/she executed the same in his/her capacity(ies), and that by his/her signature on the instrument, the individual, or the person upon behalf of which the individual acted, executed the instrument.

Elizabeth A. Fallon
Notary Public

ELIZABETH A.FALLON
Notary Public, State of New York
No. 01FA5069367
Qualified in Suffolk County
Commission Expires November 25, ~~2016~~ 2018

BSL NY DEVELOPMENT LLC, Contract Vendee

BY: _____

Title: Vice-president

STATE OF ~~NEW YORK~~ Massachusetts)
COUNTY OF ~~NASSAU~~ Middlesex) ss.:

On the 5th day of December in the year 2016 before me, the undersigned, personally appeared John Dragat, personally known to me or proved to me on the basis of satisfactory evidence to be the individual whose name is subscribed to the within instrument and acknowledged to me that he/she executed the same in his/her capacity(ies), and that by his/her signature on the instrument, the individual, or the person upon behalf of which the individual acted, executed the instrument.

_____
Notary Public

MICHAEL C. HETU
Notary Public
COMMONWEALTH OF MASSACHUSETTS
My Commission Expires
September 10, 2021

Reviewed By
Office of Town Attorney

WHEREAS, MEADOW BROOK COUNTRY CLUB, fee owner, has submitted an application to the Department of Planning and Development for Site Plan Approval to construct a proposed 2,459 square foot one-story golf practice facility within an existing Country Club, on premises located at 500 Cedar Swamp Road, Jericho, Town of Oyster Bay, County of Nassau, State of New York, and described as Section 17, Block 11, Lots 34, 38, 42, 47, and 53 on the Land and Tax Map of Nassau County; and

WHEREAS, pursuant to the Code of the Town of Oyster Bay, Chapter 246, Zoning, Sec. 246-6.2.2.3, review by the Planning Advisory Board is required, prior to Town Board approval, without the need for a public hearing, for all structures or uses in connection with a country club which is located in a residence district; and

WHEREAS, Elizabeth L. Maccarone, Commissioner, Department of Planning and Development, by memorandum dated October 29, 2019, advised that the Department of Planning and Development has reviewed the following four (4) plans prepared by Christopher M. McCagg, R.A., and two (2) plans prepared by Michael J. Rant, P.E.:

SHEET NO.	TITLE	PREPARED BY	DATE
G0.01	PROPOSED SITE PLAN	Christopher M. McCagg, R.A.	06/19/19
G1.01	SITE LIGHTING PLAN	Christopher M. McCagg, R.A.	05/13/19
A1.0	PROPOSED PLANS	Christopher M. McCagg, R.A.	06/19/19
A2.0	EXTERIOR ELEVATIONS	Christopher M. McCagg, R.A.	06/19/19
1/2	PROPOSED PLANS	Christopher M. McCagg, R.A.	06/19/19
2/2	EXTERIOR ELEVATIONS	Christopher M. McCagg, R.A.	06/19/19

WHEREAS, said Commissioner further reported that the plans submitted, comply with the standards set forth in the Code of the Town of Oyster Bay, Section 246.6, Site Plan Review; and

WHEREAS, the Town of Oyster Bay Department of Environmental Resources, Town Environmental Quality Review Division, by memorandum dated September 9, 2019, recommended Town Board determination that the subject legislation is deemed to fall under the New York State Environmental Quality Review Act, 6 NYCRR, Part 617, Section 617.5(c), Type II Actions List, as Item No. 9, relative to "construction or expansion of a primary or accessory/appurtenant, nonresidential structure or facility involving less than 4,000 square feet of gross floor area and not involving a change in zoning or a use variance and consistent with local land use controls, but not radio communication or microwave commission facilities", and as such does not require completion of an Environmental Assessment Form, Environmental Impact Statement or other environmental consideration; and

WHEREAS, THE Town of Oyster Bay Planning Advisory Board approved the Site Plan by Resolution No. 12-2019 adopted on October 16, 2019.

NOW, THEREFORE, BE IT RESOLVED, That in accordance with the memorandum of Elizabeth L. Maccarone, Commissioner, Department of Planning and Development, dated October 29, 2019, the four (4) plans prepared by Christopher M. McCagg, R.A., and the two (2) plans prepared by Michael Rant, P.E., are hereby approved; and be it further

RESOLVED, That the application of MEADOW BROOK COUNTRY CLUB, fee owner, for Site Plan Approval to construct a proposed 2,459 square foot one-story golf practice facility within an existing Country Club, on premises located at 500 Cedar Swamp Road, Jericho, Town of Oyster Bay, County of Nassau, State of New York, and described as Section 17, Block 11, Lots 34, 38, 42, 47, and 53 on the Land and Tax Map of Nassau County, is hereby APPROVED.

#

The foregoing resolution was declared adopted after a poll of the members of the Board; the vote being recorded as follows:

Supervisor Saladino	Aye
Councilman Muscarella	Aye
Councilman Macagnone	Aye
Councilwoman Johnson	Aye
Councilman Imbroto	Aye
Councilman Hand	Aye
Councilman Labriola	Aye

20

Town of Oyster Bay

Inter-Departmental Memo

TO: **MEMORANDUM DOCKET**

FROM: **ELIZABETH L. MACCARONE, COMMISSIONER**
DEPARTMENT OF PLANNING & DEVELOPMENT

DATE: **OCTOBER 29, 2019**

SUBJECT: **SITE PLAN REVIEW AND APPROVAL**
MEADOW BROOK COUNTRY CLUB
500 CEDAR SWAMP ROAD
JERICHO, N.Y. 11753
SEC. 17 BLK. 11 LOT 34, 38, 42, 47 & 53
ZONE: R1-5A
SITE PLAN APPLICATION NUMBER: SP 18-19

This Department has reviewed the proposed Site Plan Application for the above-captioned project with regard to section, block and lot designation, zoning classification, existing variances, zoning violations and required off-street parking. The Department's review is made pursuant to Chapter 246 of the Code of the Town of Oyster Bay.

The current applicant is seeking Town Board approval without the need for a Public Hearing for the enclosed Site Plan in order to construct a proposed 2,459 sq. ft. one-story golf practice facility within an existing Country Club. As per Chapter 246 Section 6.2.2.3 of the Town's Zoning Code, review by the Planning Advisory Board is required, prior to Town Board approval, for all structures or uses in connection to a country club which is located in a residence district. Please note that on October 16, 2019, this Site Plan received approval from the Planning Advisory Board through Resolution Number 12-2019 (copy enclosed).

This Department has reviewed the following four (4) drawings prepared by Christopher M. McCagg, R.A., and two (2) drawings prepared by Michael J. Rant, P.E., are identified as follows

Sheet No.	Title:	Prepared By:	Last Revised Date:
G0.01	Proposed Site Plan	Christopher Mccagg, R.A.	06/19/19
G1.01	Site Lighting Plan	Christopher Mccagg, R.A.	05/13/19
A1.0	Proposed Plans	Christopher Mccagg, R.A.	06/19/19
A2.0	Exterior Elevations	Christopher Mccagg, R.A.	06/19/19
1/2	Site Plan	Michael Rant, P.E.	05/14/19
2/2	Site Plan	Michael Rant, P.E.	05/14/19

Also submitted for your review are the following documents:

1. Planning Advisory Board Resolution Number 12-2019, Meeting of October 16, 2019.
2. Memorandum from George Baptista, Deputy Commissioner, Department of Environmental Resources, dated September 9, 2019.

Said plans were prepared and modified using the standards set forth in Chapter 246, Section 6 (Site Plan Review) of the Code of the Town of Oyster Bay as a guide. Development of the subject premises in accordance with the plans attached does comply with the requirements of Chapter 246, Section 6 (Site Plan Review) of the Code of the Town of Oyster Bay and therefore, I recommend Site Plan Approval by the Town Board.

Elizabeth L. Maccarone
ELIZABETH L. MACCARONE
COMMISSIONER

ELM:jv
Encls.

cc: Legislative Affairs (9 copies w/ attachments)

TOWN OF OYSTER BAY
INTER-DEPARTMENTAL MEMO

September 9, 2019

TO: ELIZABETH L. MACCARONE, COMMISSIONER, DEPARTMENT OF PLANNING AND DEVELOPMENT

FROM: GEORGE BAPTISTA JR., DEPUTY COMMISSIONER, DEPARTMENT OF ENVIRONMENTAL RESOURCES

SUBJECT: 500 CEDAR SWAMP ROAD; CLASSIFICATION PURSUANT TO THE STATE ENVIRONMENTAL QUALITY REVIEW ACT (SEQRA): TYPE II

LOCATION: 500 CEDAR SWAMP ROAD, JERICHO, NY 11753; SECTION: 17, BLOCK: 11, LOT(S): 34, 38, 42, 47, 53

Pursuant to Article 8 of the New York State Environmental Conservation Law, SEQRA, and the implementing regulations thereto at 6 NYCRR Part 617, and the Town of Oyster Bay Environmental Quality Review Law (Chapter 110 of the Code of the Town of Oyster Bay), the Department of Environmental Resources (DER) has reviewed the above captioned proposed action. In connection with review of this subject action pursuant to SEQRA, the Department was provided with the New York State Short Environmental Assessment Form, dated August 18, 2019, Town of Oyster Bay Short Environmental Assessment Form Addendum, dated August 18, 2019, and site plan package prepared by Tony Panza which were provided electronically to DER on August 19, 2019, regarding the proposed action.

On the basis of our evaluation, the Department of Environmental Resources concludes that this proposed action is classified as Type II pursuant to the SEQRA Type II Actions List, at 6 NYCRR §617.5(c), item #9, pertaining to "construction or expansion of a primary or accessory/appurtenant, nonresidential structure or facility involving less than 4,000 square feet of gross floor area and not involving a change in zoning or a use variance and consistent with local land use controls, but not radio communication or microwave transmission facilities".

Actions or classes of actions identified as Type II in the above-referenced section of the SEQRA regulations have been pre-determined not to have a significant impact on the environment or are otherwise precluded from environmental review under the Environmental Conservation Law, Article 8, and the SEQRA regulations. Inasmuch as the subject proposed action is classified under SEQRA's pre-determined Type II Action list, as described above, the Department of Environmental Resources has applied the law and finds that said proposed action does not require the completion of an Environmental Impact Statement (EIS), or any review or other procedural activities pursuant to SEQRA.

GEORGE BAPTISTA, JR.
Deputy Commissioner

File: FILE/ TYPE II/500 Cedar Swamp Road_Jericho

Resolution No. 12-2019

Town of Oyster Bay
Planning Advisory Board
Meeting of October 16, 2019

APPROVED AS TO FORM
EXEC. SEC. OF P.A.B

WHEREAS, an application and proposed plans have been submitted to the Town of Oyster Bay Planning Advisory Board by the Meadow Brook Corporation, (hereinafter referred to as "Applicant") Post Office Box 58, Cedar Swamp Road, Jericho, New York 11753 for the proposed construction of a 2,459 square foot one-story golf practice facility with associated site improvements at 500 Cedar Swamp Road, Jericho, New York 11753 (a/k/a Section 17, Block 11, Lot(s) 34, 38, 42, 47 & 53) in the "R1-5A" (Residential) Zoning District of the Town of Oyster Bay; and

WHEREAS, the submitted site plans have been reviewed by the Department of Planning and Development in accordance with the requirements of Section 246-6 (Site Plan Review) of the Code of the Town of Oyster Bay and has been reviewed other various interested departments and governmental agencies, and

WHEREAS, the Town of Oyster Bay Department of Environmental Resources forwarded a memorandum dated September 9, 2019, to the Planning Advisory Board; and

WHEREAS, the Planning Advisory Board has reviewed said memorandum, and finds that the proposed action is classified as a Type II Action pursuant to the SEQRA Type II Actions List, and therefore, adopts same for the purposes of SEQRA, and

WHEREAS, the Nassau County Planning Commission referred this matter to the Town of Oyster Bay for local determination by memorandum dated September 26, 2019; and

WHEREAS, the Planning Advisory Board, based upon the relevant facts and circumstances presented at the public meeting, and based upon the facts and information within the personal knowledge of the members of the Planning Advisory Board, finds the following: that because of the area, location, nature and character of the subject property, the premises are adequate and suitable for the proposed construction of a 2,459 square foot one-story golf practice facility with associated site improvements, and

WHEREAS, the Planning Advisory Board, after due deliberation, finds that the request for the proposed construction of a 2,459 square foot one-story golf practice facility with associated site improvements will not constitute an over intensification of land use and will be compatible with the surrounding area and community at large, and

NOW, THEREFORE BE IT RESOLVED that the following four (4) drawings prepared by Christopher M. McCagg, R.A., are identified as follows:

NUMBER	TITLE	LAST REVISED
G0.01	PROPOSED SITE PLAN	06/19/2019
G1.01	SITE LIGHTING PLAN	05/13/2019
A1.0	PROPOSED PLANS	06/19/2019
A2.0	EXTERIOR ELEVATIONS	06/19/2019

APPROVED AS TO FORM
EXEC. SEC. OF P.A.B.

and the following two (2) drawings prepared by Michael J. Rant, P.E., are identified as follows:

NUMBER	TITLE	LAST REVISED
1 OF 2	SITE PLAN	05/14/2019
2 OF 2	SITE PLAN	05/14/2019

which are attached hereto, made part hereof and are hereby APPROVED by the Town of Oyster Bay Planning Advisory Board, subject to final Town Board Site Plan Approval, and subject to full compliance in all respects with the following conditions and provisions:

1. The site plans captioned above shall be strictly adhered to.
2. Pursuant to Chapter 246 (Zoning), Section 6.9.1 (Minor Amendments) of the Code of the Town of Oyster Bay, the Commissioner of the Department of Planning and Development may approve minor adjustments to the approved site plan that are deemed necessary or appropriate. Minor adjustments must be consistent with the basic concepts of the approved site plan.
3. This resolution is not intended to approve building and construction plans which must be submitted to the Division of Building for approval prior to the issuance of a Building Permit.
4. The subject parcel shall be used and developed so as to comply with all local laws, ordinances, building codes, rules and regulations of any and all Town, County, State and/or Federal bodies, departments or agencies thereof.

A motion for adoption was made by Member Warner and seconded by Member Chabina.

The foregoing resolution was declared adopted after a poll of the members of the Board, the vote being recorded as follows:

Chairman Stanco	Aye
Member DiLeonardo	Aye
Member Chabina	Aye
Member Warner	Aye
Member Castellane	Aye
Member Byrne	Aye

Reviewed By
Office of Town Attorney

WHEREAS, Resolution No. 888-2017, adopted on December 12, 2017, authorized the Department of Human Resources to enter into an agreement with Cigna to provide dental insurance coverage for the employees and retirees of the Town for the period commencing January 1, 2018 through December 31, 2018 with two (2) one (1) year extension options, and

WHEREAS, John Canning, Commissioner, Department of Human Resources by memorandum dated November 1, 2019, recommended that the Town Board authorize and exercise the second one (1) year extension with Cigna, at a cost not to exceed $2,262,714.00 with the rates for Calendar Year 2020 as follows:

Year 3 (PPO) - January 1, 2020 through December 31, 2020

Employee Only:	$49.09
Employee Plus Family:	$137.74

Year 3 (DHMO) - January 1, 2020 through December 31, 2020

Employee Only:	$33.86
Employee Plus Family:	$85.86

NOW, THEREFORE, BE IT RESOLVED, That the abovementioned recommendation is hereby accepted and approved, and the Supervisor, or his designee, is hereby authorized to execute any and all documents necessary to exercise the second one (1) year extension option with Cigna, to provide dental insurance coverage for the employees and retirees of the Town, for the period commencing January 1, 2020 through December 31, 2020, at a cost not to exceed $2,262,714.00; and be it further

RESOLVED, That the Comptroller is hereby authorized and directed to make payment for same, upon presentation of a duly certified claim, after audit, the funds for said payment to be drawn from Account No. TWN AMM 9060 80000 000 0000 000.

-#-

The foregoing resolution was declared adopted after a poll of the members of the Board; the vote being recorded as follows:

Supervisor Saladino	Aye
Councilman Muscarella	Aye
Councilman Macagnone	Aye
Councilwoman Johnson	Aye
Councilman Imbroto	Aye
Councilman Hand	Aye
Councilman Labriola	Aye

21

Town of Oyster Bay
Inter-Departmental Memorandum

November 1, 2019

TO: Memorandum Docket

FROM: John Canning, Commissioner
Department of Human Resources

SUBJECT: ***TOWN OF OYSTER BAY DENTAL PLAN-2020***

Resolution number 888-2017 authorized the Town Supervisor to execute a Dental Plan agreement with CIGNA/CGLIC for the period January 1, 2018 through December 31, 2018, with two (2) one year renewal options at a 5.5% rate cap for the first year and a 6% cap for the second year.

Therefore, it is hereby recommended that the Honorable Town Board approve the renewal of the Town of Oyster Bay Dental Plan agreement between CIGNA/CGLIC and the Town of Oyster Bay, for the period January 1, 2020 through December 31, 2020, under the same terms and conditions, except as modified as to the rate for the renewal option.

In view of the comparison of the proposals received as a result of the Dental Committee's prior Request for Proposals previously conducted by Kurz Planning, Inc., it was determined that CIGNA's Network Access and renewal action, continues to provide the Town of Oyster Bay with our current excellent level of benefits and network providers. The 2020 DHMO renewal rate has a 6% increase from 2018. CIGNA/CGLIC's renewal rate at 2.84% for the PPO is as follows (*please see attached*):

Year 3 (PPO) – January 1, 2020 through December 31, 2020:

SINGLE	***$ 49.09***
FAMILY	***$137.74***

Year 3 (DHMO) – January 1, 2020 through December 31, 2020:

SINGLE	***$ 33.86***
FAMILY	***$ 85.86***

Upon the approval of the continuation of the agreement between CIGNA/CGLIC and the Town of Oyster Bay, it is further requested that the Honorable Town Board authorize the Town Comptroller to pay CIGNA/CGLIC from Account No.TWN AMM 9060 80000 000 0000 000 or any other appropriate account, effective January 1, 2020 through December 31, 2020, at a cost not to exceed $2,262,714.00, allowing for an approximate 6% increase in the number of enrollees next year.

John Canning
Commissioner

JC:DOR
Attach
Town Attorney (Original w/7 copies)

Cigna.

Town of Oyster Bay

Guaranteed Cost Funding
Non-Participating
January 01, 2020 - December 31, 2020

Tier	Expected Lives	Renewal Rates
Dental PPO - Plan 1		
Employee Only	520	$49.09
Employee + Family	1,070	$137.74
Annual Cost	1,590	$2,074,903

**The above quoted rates include 2.50% Health Insurance Assessment fees (PPACA).*

Tier	Expected Lives	Renewal Rates
Dental HMO [P1-00]		
Employee Only	22	$33.86
Employee + Family	41	$85.86
Annual Cost	63	$51,182

**The above quoted rates include 2.50% Health Insurance Assessment fees (PPACA).*

Reviewed By
Office of Town Attorney

Meeting of December 12, 2017 Resolution No. 888-2017

WHEREAS, Resolution No. 682-2017, adopted on October 17, 2017, authorized the Department of Human Resources to prepare and publish a Request for Proposal for dental insurance coverage for the employees and retirees of the Town for a three-year period commencing January 1, 2018 through December 31, 2020, and

WHEREAS, John Canning, Commissioner, Department of Human Resources by memoranda dated November 27, 2017 and December 7, 2017, has advised that one Proposal was received pursuant to the Request for Proposal from Kurz Planning, Inc., which sent out rates to eleven (11) dental insurance carriers and received quotes from nine (9) different insurance carriers, resulting in Kurz Planning, Inc.'s recommendation that the Town continue procurement of coverage through Cigna as its dental insurance carrier for the Town's employees and retirees for one (1) year commencing January 1, 2018 through December 31, 2018, with two (2) one year extensions, at a cost for year one not to exceed $2,116,657.00, with the rates for year one as follows:

Year 1 (PPO) - January 1, 2018 through December 31, 2018

Employee Only:	$45.25
Employee Plus Family:	$126.96

Year 1 (DHMO) - January 1, 2018 through December 31, 2018

Employee Only:	$31.94
Employee Plus Family:	$81.00

NOW, THEREFORE, BE IT RESOLVED, That the abovementioned recommendation is hereby accepted and approved, and the Department of Human Resources is hereby authorized to enter into an agreement with CIGNA to provide dental coverage for Town employees and qualified retirees for one (1) year with two (2) one (1) year extensions, with the first year commencing January 1, 2018 through December 31, 2018, with a cost for year one not to exceed $2,116,657.00; and be it further

RESOLVED, That the Comptroller is hereby authorized and directed to make payment for same, upon presentation of a duly certified claim, after audit, the funds for said payment to be drawn from Account No. TWN AMM 9060 80000 000 0000 000.

#

The foregoing resolution was declared adopted after a poll of the members of the Board; the vote being recorded as follows:

Supervisor Saladino	Aye
Councilman Muscarella	Aye
Councilman Macagnone	Aye
Councilwoman Alesia	Absent
Councilwoman Johnson	Aye
Councilman Imbroto	Absent
Councilman Hand	Aye

cc: Supervisor
Town Attorney
Comptroller (2)
Human Resources

Meeting of November 19, 2019 Resolution No. 702-2019

Reviewed By
Office of Town Attorney

RESOLVED, That a public hearing will be held in the Hearing Room, Town Hall, 54 Audrey Avenue, Oyster Bay, New York 11771 on the 10th day of December, 2019, at 10:00 o'clock a.m., prevailing time on that day, or as soon thereafter as practicable, or on an adjourned date therefrom, to consider the application of JOEL AND RANDY SPORN, Contract Vendees, for a Special Use Permit for the conversion of 10,230 square feet of commercial space to allow the operation of an auxillary automobile service center on the subject premises located in a Light Industrial (LI) Zone, at 299 Duffy Avenue, Hicksville, Town of Oyster Bay, County of Nassau, State of New York and described as Section 11, Block H, Lot 352 on the Land and Tax Map of Nassau County, and be it further

RESOLVED, That the Town Clerk shall publish notice of such hearing in

newspapers of general circulation within the Town of Oyster Bay.

-#-

The foregoing resolution was declared adopted after a poll of the members of the Board; the vote being recorded as follows:

Supervisor Saladino	Aye
Councilman Muscarella	Aye
Councilman Macagnone	Aye
Councilwoman Johnson	Aye
Councilman Imbroto	Aye
Councilman Hand	Aye
Councilman Labriola	Aye

29

Town of Oyster Bay
Inter-Departmental Memo

TO : MEMORANDUM DOCKET

FROM : OFFICE OF THE TOWN ATTORNEY

DATE : October 29, 2019

SUBJECT: JOEL AND RANDY SPORN
Application for Special Use Permit
299 Duffy Avenue,
Hicksville, New York
Section 11, Block H, Lot 352

It is requested that at the November 19, 2019 Town Board meeting the Town Board authorize the Town Clerk to advertise a Notice of Hearing, for a Public Hearing to be held on December 10, 2019, in connection with the above referenced matter.

JOSEPH NOCELLA
TOWN ATTORNEY

Dennis P. Sheehan
Deputy Town Attorney

DPS:ba
Enclosure
File No. 2019-7047
cc: Town Attorney (w/9 copies)

S:\Attorney\RESOS 2019\MD & RESO\MD for Public Hearing Sporn. DPS.doc

Reviewed By
Office of Town Attorney

PUBLIC NOTICE

NOTICE is hereby given, pursuant to law, that a public hearing will be held by the Town Board of the Town of Oyster Bay, Nassau County, New York, on Tuesday, December 10, 2019, at 10:00 a.m., prevailing time, or as soon thereafter as may be practicable, in the Hearing Room, Town Hall, East Building, 54 Audrey Avenue, Oyster Bay, New York, for the purpose of considering an application from JOEL AND RANDY SPORN, Contract Vendee, for a Special Use Permit for the conversion of 10,230 square feet of commercial space to allow the operation of an auxillary automobile service center, on the subject premises, located in a Light Industrial (LI) Zone, at 299 Duffy Avenue, Hicksville, Town of Oyster Bay, County of Nassau, State of New York, and described as Section 11, Block H, Lot 352 on the Land and Tax Map of Nassau County. The abovementioned application is on file and may be viewed daily (except Saturday, Sunday and Holidays) between the hours of 9:00 a.m. and 4:45 p.m., prevailing time, at the Office of the Town Clerk at Oyster Bay and Massapequa. Any person interested in the subject matter of said hearing will be given an opportunity to be heard with reference thereto, at the time and place above designated. TOWN BOARD OF TOWN OF OYSTER BAY. JOSEPH S. SALADINO, Supervisor. JAMES ALTADONNA, JR., Town Clerk.

Dated:_____, Oyster Bay, New York.

Reviewed By
Office of Town Attorney

RESOLVED, That a public hearing will be held in the Hearing Room, Town Hall, 54 Audrey Avenue, Oyster Bay, New York 11771 on the 10th day of December, 2019, at 10:00 o'clock a.m., prevailing time on that day, or as soon thereafter as may be practicable, or on an adjourned date therefrom, to consider the application of MASSAPEQUA PLAZA ASSOCIATES, Owner, & MASSAPEQUA FBBC, LLC d/b/a FIT BODY BOOT CAMP, Tenant, for a Special Use Permit to allow the operation of a fitness facility in excess of 1,500 square feet, on the subject premises, located in a Neighborhood Business (NB) District, at 5117-5167 Merrick Road, Massapequa, Town of Oyster Bay, County of Nassau, State of New York and described as Section 53, Block 172, Lot 15 on the Land and Tax Map of Nassau County, and be it further

RESOLVED, That the Town Clerk shall publish notice of such hearing in newspapers of general circulation within the Town of Oyster Bay.

#

The foregoing resolution was declared adopted after a poll of the members of the Board; the vote being recorded as follows:

Supervisor Saladino	Aye
Councilman Muscarella	Aye
Councilman Macagnone	Aye
Councilwoman Johnson	Aye
Councilman Imbroto	Aye
Councilman Hand	Aye
Councilman Labriola	Aye

Reviewed By
Office of Town Attorney

PUBLIC NOTICE

NOTICE is hereby given, pursuant to law, that a public hearing will be held by the Town Board of the Town of Oyster Bay, Nassau County, New York, on Tuesday, December 10, 2019, at 10:00 a.m., prevailing time, or as soon thereafter as may be practicable, in the Hearing Room, Town Hall, East Building, 54 Audrey Avenue, Oyster Bay, New York, for the purpose of considering an application from MASSAPEQUA PLAZA ASSOCIATES, Owner, & MASSAPEQUA FBBC, LLC d/b/a FIT BODY BOOT CAMP, Tenant, for a Special Use Permit to allow the operation of a fitness facility in excess of 1,500 square feet, on the subject premises, located in a Neighborhood Business (NB) District, at 5117-5167 Merrick Road, Massapequa, Town of Oyster Bay, County of Nassau, State of New York, and described as Section 53, Block 172, Lot 15 on the Land and Tax Map of Nassau County. The abovementioned application is on file and may be viewed daily (except Saturday, Sunday and Holidays) between the hours of 9:00 a.m. and 4:45 p.m., prevailing time, at the Office of the Town Clerk at Oyster Bay and Massapequa. Any person interested in the subject matter of said hearing will be given an opportunity to be heard with reference thereto, at the time and place above designated. TOWN BOARD OF TOWN OF OYSTER BAY. JOSEPH S. SALADINO, Supervisor. JAMES ALTADONNA, JR., Town Clerk.

Dated:_____, Oyster Bay, New York.

30

Town of Oyster Bay
Inter-Departmental Memo

TO : MEMORANDUM DOCKET

FROM : OFFICE OF THE TOWN ATTORNEY

DATE : October 28, 2019

SUBJECT: Massapequa Plaza Associates, Owner & Massapequa FBBC, LLC d/b/a Fit Body Boot Camp, Tenant
Application for Special Use Permit
5117-5167 Merrick Road,
Massapequa, New York
Section 53, Block 172, Lot 15

It is requested that at the November 19, 2019 Town Board meeting the Town Board authorize the Town Clerk to advertise a Notice of Hearing, for a Public Hearing to be held on December 10, 2019, in connection with the above referenced matter.

JOSEPH NOCELLA
TOWN ATTORNEY

Dennis P. Sheehan
Deputy Town Attorney

DPS:ba
Enclosure
File No. 2019-7078
cc: Town Attorney (w/9 copies)

S:\Attorney\RESOS 2019\MD & RESO\MD for Public Hearing Mass Plaza Assoc. DPS.doc

Reviewed By
Office of Town Attorney

WHEREAS, Richard W. Lenz, P.E., Commissioner, Department of Public Works/Highway, by memorandum dated October 31, 2019, requested that the Department of Public Works be permitted to conduct a presentation of the Local Solid Waste Management Plan (LSWMP) at the Town Board meeting of December 10, 2019. Commissioner Lenz, in said memorandum, further requested that the Office of the Town Clerk be authorized to publish a Public Notice for this purpose at least 15 days prior to the presentation,

NOW, THEREFORE, BE IT RESOLVED, That the requests as hereinabove set forth are hereby accepted and approved, and the Department of Public Works is hereby authorized to conduct a presentation of the LSWMP at the Town Board meeting of December 10, 2019, and the Office of the Town Clerk is hereby authorized and directed to publish the aforesaid Public Notice.

-#-

The foregoing resolution was declared adopted after a poll of the members of the Board; the vote being recorded as follows:

Supervisor Saladino	Aye
Councilman Muscarella	Aye
Councilman Macagnone	Aye
Councilwoman Johnson	Aye
Councilman Imbroto	Aye
Councilman Hand	Aye
Councilman Labriola	Aye

34

TOWN OF OYSTER BAY

INTER-DEPARTMENTAL MEMO

OCTOBER 31, 2019

TO : MEMORANDUM DOCKET

FROM : RICHARD W.LENZ, P.E., COMMISSIONER
DEPARTMENT OF PUBLIC WORKS/HIGHWAY

SUBJECT: PUBLIC COMMENT PERIOD
TOWN OF OYSTER BAY SOLID WASTE DISPOSAL DISTRICT
LOCAL SOLID WASTE MANAGEMENT PLAN

The Department of Public Works and Department of Environmental Resources have prepared the attached draft Local Solid Waste Management Plan (LSWMP) for the Town of Oyster Bay Solid Waste Disposal District, dated July 2019, in accordance with the requirements of New York State Environmental Conservation Law sections 27-0106 and 27-0107, and New York State Department of Environmental Conservation ("DEC") Regulations Part 366-3.

The purpose of the LSWMP is to summarize the current Town solid waste management and recycling practices, and to set goals for future reduction in waste generation through the expansion and development of waste diversion programs. The time period for the LSWMP is from 2019 through 2028.

The LSWMP has been revised based upon review by DEC, and has been determined to be complete. In accordance with DEC regulations the Town must commence a public review process which includes an overview presentation of LSWMP and a 45 day public comment period.

It is requested that the Department of Public Works be permitted to conduct a presentation of the LSWMP at the Town Board meeting of December 10, 2019 and that a 45 day public comment period commence at that time. It is further requested that at the Town Board meeting of November 19, 2019 the Office of the Town Clerk be authorized to publish a Public Notice for this purpose at least 15 days prior to the presentation.

RICHARD W. LENZ, P.E.
COMMISSIONER
DEPARTMENT OF PUBLIC WORKS/HIGHWAY

RWL/JTC/MR/lk
Attachments
c: Office of the Town Attorney (w/9 copies)
Steven Ballas, Comptroller
George Baptista, Deputy Commissioner/Environmental Resources
Daniel Pearl, Deputy Commissioner/Public Works

DOCKET LSWMP PUBLIC MEETING REQUEST 3

PUBLIC NOTICE

PLEASE TAKE NOTE that the Town of Oyster Bay Town Board will be presenting the draft **Local Solid Waste Management Plan (LSWMP)** for the Town of Oyster Bay Solid Waste Disposal District at the Town Board meeting of **December 10, 2019**. Following this presentation a 45-calendar day public comment period shall commence.

A copy of the draft Local Solid Waste Management Plan is available for viewing at the Office of the Town Clerk, 54 Audrey Avenue, Oyster Bay, New York, and is also available on the Town of Oyster Bay website at www.oysterbaytown.com.

Public comment can be made at the Town Board meeting of December 10, 2019, or in writing to the Department of Public Works, attn.: LSWMP Public Comment, 150 Miller Place, Syosset, New York, 11791.

The draft Local Solid Waste Management Plan has been prepared in accordance with the requirements of New York State Environmental Conservation Law sections 27-0106 and 27-0107, and New York State Department of Environmental Conservation ("DEC") Regulations Part 366-3.

BY ORDER OF THE TOWN BOARD OF THE TOWN OF OYSTER BAY, Supervisor Joseph S. Saladino, James Altadonna, Jr., Town Clerk, Richard W. Lenz, P.E., Commissioner of Public Works/Highway.

Approved: November 19, 2019

Reviewed By
Office of Town Attorney

PUBLIC NOTICE

PLEASE TAKE NOTE that the Town of Oyster Bay Town Board will be presenting the draft Local Solid Waste Management Plan (LSWMP) for the Town of Oyster Bay Solid Waste Disposal District at the Town Board meeting of December 10, 2019, at 10:00 a.m. Following this presentation a 45-calendar day public comment period shall commence. A copy of the draft Local Solid Waste Management Plan is available for viewing at the Office of the Town Clerk, 54 Audrey Avenue, Oyster Bay, New York, and is also available on the Town of Oyster Bay website at www.oysterbaytown.com. Public comment can be made at the Town Board meeting of December 10, 2019, or in writing to the Department of Public Works, att.: LSWMP Public Comment, 150 Miller Place, Syosset, New York, 11791. The draft Local Solid Waste Management Plan has been prepared in accordance with the requirements of New York State Environmental Conservation Law sections 27-0106 and 27-0107, and New York State Department of Environmental Conservation ("DEC") Regulations Part 366-3. BY ORDER OF THE TOWN BOARD OF THE TOWN OF OYSTER BAY, JOSEPH S. SALADINO, Supervisor, JAMES ALTADONNA, JR., Town Clerk. Dated: November 8, 2019, Oyster Bay, New York.

WHEREAS, Mr. Leonard Margolis, President, Locust Valley Chamber of Commerce, P. O. Box 178, Locust Valley, New York 11560, in conjunction with the Matinecock Neighborhood Association, 11 Peacock Pond Road, Glen Cove, New York 11542, by letter dated October 10, 2019, requested the closure of the parking area (island) on Birch Hill Road, between Forest Avenue and Elm Street, near the railroad crossing, Locust Valley, as well as the use of one (1) small show mobile and six (6) complete barricades for the Chamber's Annual Holiday Tree Lighting Ceremony, to be held on Tuesday, December 3, 2019, from 12:00 pm until 8:30 pm; and

WHEREAS, John P. Bishop, Deputy Commissioner of the Highway Department, by memorandum dated October 30, 2018, advised that the above-mentioned property and equipment will not be required for use by the Town at that time, and that the the Highway Department has no objection to providing the Locust Valley Chamber of Commerce with the closure of the parking area (island) on Birch Hill Road, between Forest Avenue and Elm Street, near the railroad crossing, Locust Valley, as well as the use of one (1) show mobile and six (6) complete barricades for the Chamber's Annual Holiday Tree Lighting Ceremony, to be held on Tuesday, December 3, 2019 from 12:00 pm until 8:30 pm; and

Reviewed By
Office of Town Attorney

WHEREAS, the Town Board deems this event to be an appropriate and worthwhile endeavor, and one which will benefit the residents of the Town of Oyster Bay,

NOW, THEREFORE, BE IT RESOLVED, That the requests as hereinabove set forth are approved, and the Highway Department is hereby authorized to close the parking area (island) on Birch Hill Road, between Forest Avenue and Elm Street, near the railroad crossing, Locust Valley, and to provide the Locust Valley Chamber of Commerce with the use of one (1) show mobile and six (6) complete barricades for the Chamber's Annual Holiday Tree Lighting Ceremony, to be held on Tuesday, December 3, 2019 from 12:00 pm until 8:30 pm; subject to the following terms and conditions:

1. The use of all Town property shall be in conformance with the direction of the Commissioner of the Department of Public Works or his duly authorized representative;

2. The said organization shall comply with all ordinances of the Town of Oyster Bay, both in its use of Town property and equipment, and in the conduct of the afore-described activity; and

3. The said organization shall file a certificate of insurance with the Office of the Town Clerk, indicating said organization maintains general liability insurance in the amount of $2,000,000 bodily injury and $1,000,000 property damage, and naming the Town as an additional insured, in connection with the afore-described activity.

-#-

The foregoing resolution was declared adopted after a poll of the members of the Board; the vote being recorded as follows:

Supervisor Saladino	Aye
Councilman Muscarella	Aye
Councilman Macagnone	Aye
Councilwoman Johnson	Aye
Councilman Imbroto	Aye
Councilman Hand	Aye
Councilman Labriola	Aye

36

TOWN OF OYSTER BAY

Inter-Departmental Memo

October 30, 2019

TO: MEMORANDUM DOCKET

FROM: JOHN P. BISHOP, DEPUTY COMMISSIONER
HIGHWAY DEPARTMENT

SUBJECT: LOCUST VALLEY CHAMBER OF COMMERCE
ANNUAL TREE LIGHTING CEREMONY
DECEMBER 3, 2019

Enclosed please find a copy of the letter from Len Margolis, President, requesting our assistance on behalf of the Locust Valley Chamber of Commerce in conducting their Annual Tree Lighting Ceremony on Tuesday, December 3, 2019.

The Highway Department has no objection to the Locust Valley Chamber of Commerce closing off the Island on Birch Hill Road (near the railroad crossing) in Locust Valley, on Tuesday, December 3, 2019, for their Annual Tree Lighting Ceremony.

Further, since Birch Hill Road in Locust Valley is a County roadway, we are requesting a letter be sent to Kenneth G. Arnold, P.E., Commissioner, Nassau County Department of Public Works requesting permission for the Locust Valley Chamber of Commerce to close off the Island on Birch Hill Road in Locust Valley during the Annual Tree Lighting Ceremony on December 3, 2019.

In addition, the Highway Department will be pleased to provide six (6) complete barricades for the event. Parks Department fees are in conjunction with Resolution #174-2017, pertaining to permits for show mobile. Also attached are the Certificate of Insurance, Endorsement Sheet, and Hold Harmless Agreement to cover the event. Therefore, Town Board approval is requested.

JOHN P. BISHOP, DEPUTY COMMISSIONER
HIGHWAY DEPARTMENT

JPB/kaz

C: Town Attorney (9) copies
Richard Lenz, P.E., Commissioner DPW
Doug Robalino, General Foreman 002
Peter Brown, General Foreman 003
Justin McCaffrey, Commissioner, Public Safety Department
Grace SantaMaria, Highway Administration

Ken 2

DEPUTY COMM/HIGHWAY

RECEIVED OCT 11 2019 AM 11:12

Locust Valley Chamber of Commerce
P.O. Box 178
Locust Valley, New York 11560
www.locustvalleychamber.com

October 10th, 2019

Richard Lenz
Commissioner of Highway
150 Miller Place
Syosset, NY 11791

Dear Mr. Lenz,

The Locust Valley Chamber of Commerce (LVCC) & the Matinecock Neighborhood Association will be holding its Annual Tree Lighting Ceremony, on Tuesday December 3rd, 2019. We would like to request a permit to close off the parking area (island) on Birch Hill Road (between Forest Ave. and Elm St.). We are hoping that this will help bring potential customers to the area to promote commerce in the area for this event.

We would like to request the use of the Small Show Mobile and 6 Barricades to close off the parking area.

The requisite insurance will be provided to the Town of Oyster Bay and Nassau County for this event. We would very much appreciate your assistance in arranging for a permit, for the approval for the use of this area.

Should you have any questions or require any further information please do not hesitate to contact me @ (516) 759-1133. Thank you

Yours Truly,

Len Margolis, President

LOCUS-4

OP ID: MC

CERTIFICATE OF LIABILITY INSURANCE

DATE (MM/DD/YYYY) 10/11/2019

THIS CERTIFICATE IS ISSUED AS A MATTER OF INFORMATION ONLY AND CONFERS NO RIGHTS UPON THE CERTIFICATE HOLDER. THIS CERTIFICATE DOES NOT AFFIRMATIVELY OR NEGATIVELY AMEND, EXTEND OR ALTER THE COVERAGE AFFORDED BY THE POLICIES BELOW. THIS CERTIFICATE OF INSURANCE DOES NOT CONSTITUTE A CONTRACT BETWEEN THE ISSUING INSURER(S), AUTHORIZED REPRESENTATIVE OR PRODUCER, AND THE CERTIFICATE HOLDER.

IMPORTANT: If the certificate holder is an ADDITIONAL INSURED, the policy(ies) must have ADDITIONAL INSURED provisions or be endorsed. If SUBROGATION IS WAIVED, subject to the terms and conditions of the policy, certain policies may require an endorsement. A statement on this certificate does not confer rights to the certificate holder in lieu of such endorsement(s).

PRODUCER
BADGE AGENCY, INC.
1000 Woodbury Rd, Suite 207
Woodbury, NY 11797
REARDON RAPLEE LINDNER
516-676-0070

CONTACT NAME: REARDON RAPLEE LINDNER
PHONE (A/C, No, Ext): 516-676-0070 FAX (A/C, No): 516-676-0258
E-MAIL ADDRESS:

INSURER(S) AFFORDING COVERAGE	NAIC #
INSURER A : MT. VERNON INSURANCE CO.	
INSURER B :	
INSURER C :	
INSURER D :	
INSURER E :	
INSURER F :	

INSURED
Locust Valley Chamber of Commerce
P O Box 178
Locust Valley, NY 11560

COVERAGES CERTIFICATE NUMBER: REVISION NUMBER:

THIS IS TO CERTIFY THAT THE POLICIES OF INSURANCE LISTED BELOW HAVE BEEN ISSUED TO THE INSURED NAMED ABOVE FOR THE POLICY PERIOD INDICATED. NOTWITHSTANDING ANY REQUIREMENT, TERM OR CONDITION OF ANY CONTRACT OR OTHER DOCUMENT WITH RESPECT TO WHICH THIS CERTIFICATE MAY BE ISSUED OR MAY PERTAIN, THE INSURANCE AFFORDED BY THE POLICIES DESCRIBED HEREIN IS SUBJECT TO ALL THE TERMS, EXCLUSIONS AND CONDITIONS OF SUCH POLICIES. LIMITS SHOWN MAY HAVE BEEN REDUCED BY PAID CLAIMS.

INSR LTR	TYPE OF INSURANCE	ADDL INSD	SUBR WVD	POLICY NUMBER	POLICY EFF (MM/DD/YYYY)	POLICY EXP (MM/DD/YYYY)	LIMITS	
A	X COMMERCIAL GENERAL LIABILITY							
	CLAIMS-MADE / X OCCUR	X		NBP2552681A	05/04/2019	05/04/2020	EACH OCCURRENCE	$ 1,000,000
							DAMAGE TO RENTED PREMISES (Ea occurrence)	$ 100,000
							MED EXP (Any one person)	$ 5,000
							PERSONAL & ADV INJURY	$
	GEN'L AGGREGATE LIMIT APPLIES PER: POLICY / PRO-JECT / LOC						GENERAL AGGREGATE	$ 2,000,000
	OTHER:						PRODUCTS - COMP/OP AGG	$
								$
	AUTOMOBILE LIABILITY						COMBINED SINGLE LIMIT (Ea accident)	$
	ANY AUTO						BODILY INJURY (Per person)	$
	OWNED AUTOS ONLY / SCHEDULED AUTOS						BODILY INJURY (Per accident)	$
	HIRED AUTOS ONLY / NON-OWNED AUTOS ONLY						PROPERTY DAMAGE (Per accident)	$
								$
	UMBRELLA LIAB / OCCUR						EACH OCCURRENCE	$
	EXCESS LIAB / CLAIMS-MADE						AGGREGATE	$
	DED / RETENTION $							$
	WORKERS COMPENSATION AND EMPLOYERS' LIABILITY						PER STATUTE / OTH-ER	
	ANY PROPRIETOR/PARTNER/EXECUTIVE OFFICER/MEMBER EXCLUDED? (Mandatory in NH) Y/N	N/A					E.L. EACH ACCIDENT	$
	If yes, describe under DESCRIPTION OF OPERATIONS below						E.L. DISEASE - EA EMPLOYEE	$
							E.L. DISEASE - POLICY LIMIT	$

DESCRIPTION OF OPERATIONS / LOCATIONS / VEHICLES (ACORD 101, Additional Remarks Schedule, may be attached if more space is required)

Certificate Holder is additional insured.

RE Tree Lighting Dec 3, 2019

CERTIFICATE HOLDER

TOBARTW

TOWN OF OYSTER BAY
150 MILLER PLACE
SYOSSET, NY 11791

Reviewed By
Office of Town Attorney

CANCELLATION

SHOULD ANY OF THE ABOVE DESCRIBED POLICIES BE CANCELLED BEFORE THE EXPIRATION DATE THEREOF, NOTICE WILL BE DELIVERED IN ACCORDANCE WITH THE POLICY PROVISIONS.

AUTHORIZED REPRESENTATIVE

Michael Kenton

POLICY NUMBER: NBP2552681A

COMMERCIAL GENERAL LIABILITY
CG 20 26 04 13

THIS ENDORSEMENT CHANGES THE POLICY. PLEASE READ IT CAREFULLY.

ADDITIONAL INSURED – DESIGNATED PERSON OR ORGANIZATION

This endorsement modifies insurance provided under the following:

COMMERCIAL GENERAL LIABILITY COVERAGE PART

SCHEDULE

Name Of Additional Insured Person(s) Or Organization(s):
Town of Oyster Bay 150 Miller Place Syosset, NY 11791
Information required to complete this Schedule, if not shown above, will be shown in the Declarations.

A. Section II – Who Is An Insured is amended to include as an additional insured the person(s) or organization(s) shown in the Schedule, but only with respect to liability for "bodily injury", "property damage" or "personal and advertising injury" caused, in whole or in part, by your acts or omissions or the acts or omissions of those acting on your behalf:

1. In the performance of your ongoing operations; or
2. In connection with your premises owned by or rented to you.

However:

1. The insurance afforded to such additional insured only applies to the extent permitted by law; and
2. If coverage provided to the additional insured is required by a contract or agreement, the insurance afforded to such additional insured will not be broader than that which you are required by the contract or agreement to provide for such additional insured.

B. With respect to the insurance afforded to these additional insureds, the following is added to Section III – Limits Of Insurance:

If coverage provided to the additional insured is required by a contract or agreement, the most we will pay on behalf of the additional insured is the amount of insurance:

1. Required by the contract or agreement; or
2. Available under the applicable Limits of Insurance shown in the Declarations;

whichever is less.

This endorsement shall not increase the applicable Limits of Insurance shown in the Declarations.

Reviewed By
Office of Town Attorney

Hold Harmless Agreement for Use of Town Property and/or Equipment

This Agreement is made this 10 day of October 2019, by Locust Valley Chamber of Commerce (hereinafter "Organization"). Whereas, Organization desires to use Town of Oyster Bay property and/or equipment located at and/or described as Parking Area on Birch Hill Road between Forest Ave + Elm Street. Need use of small Snowmobile + 6 Barricades

for the event described as Locust Valley Tree Lighting

The property/equipment is needed from Dec. 3rd 2:00pm to until 8:00pm.

The event for which the property and/or equipment is requested (__) is (✓) is not a profit making event.

In consideration of the Town granting the Organization permission to temporarily use Town property and/or equipment, the undersigned, on behalf of the Organization, hereby agrees to assume all liability and risk of loss and shall be responsible for the supervision and welfare of all persons arriving on and using Town property and/or equipment in connection with the abovementioned event. The undersigned further hereby releases the Town of Oyster Bay, its officers, employees, servants, agents and enumerated volunteers from any liability for any injuries sustained or damages incurred and agrees to reimburse the Town for any damages arising out of the Organization's use of the Town property and/or equipment. The undersigned agrees to indemnify and hold harmless the Town, its officers, employees, servants, agents and enumerated volunteers, and to protect and defend them against any and all claims for loss and/or expense or suits for damage to persons or property, including its property, arising from its use of Town property and/or equipment.

Further, the Organization agrees to provide the Town with a copy of its general liability insurance certificate, in the amounts of $1,000,000 each occurrence, $2,000,000 general aggregate and, where appropriate, $2,000,000 products, naming the Town as additional insured. All certificates of insurance must be accompanied by an endorsement.

I understand that the abovementioned use of Town property and/or equipment is subject to the approval of the Town Board of the Town of Oyster Bay.

Name of Organization

Locust Valley Chamber of Commerce

Address of Organization

P.O. Box 178
Locust Valley NY 11560

By: [signature]
Authorized Representative

Title: President

Telephone Number: 516-759-1133
cell [redacted]

s:\attorney\lfh\lfh\holdharmlessforuseofownpropityequip.docx

Reviewed By
Office of Town Attorney

Meeting of April 4, 2017

Resolution No. 174-2017

WHEREAS, Joseph G. Pinto, Commissioner of the Department of Parks, by memorandum dated March 27, 2017, requested Town Board authorization, to implement the attached Town of Oyster Bay 2017 Revised Department of Parks Field Permit and Equipment Fee Schedule, and further requested that the Commissioner of Parks be authorized to promulgate the rules and regulations for the issuance of field and equipment permits and the collection of the commensurate fees,

NOW, THEREFORE, BE IT RESOLVED, That the request as hereinabove set forth is hereby accepted and approved, and the Department of Parks is hereby authorized to implement the attached Town of Oyster Bay 2017 Revised Department of Parks Field Permit and Equipment Fee Schedule, and the Commissioner of Parks is authorized to promulgate the rules and regulations for the issuance of field and equipment permits and the collection of the commensurate fees.

-#-

The foregoing resolution was declared adopted after a poll of the members of the Board; the vote being recorded as follows:

Supervisor Saladino	Aye
Councilman Muscarella	Aye
Councilman Macagnone	Absent
Councilman Coschignano	Aye
Councilwoman Alexis	Aye
Councilwoman Johnson	Aye
Councilman Imbroto	Aye

cc: Supervisor
Town Attorney
Comptroller (2)
Parks

Kim Z.

LAURA CURRAN
NASSAU COUNTY EXECUTIVE

KENNETH G. ARNOLD, P.E.
COMMISSIONER

HIGHWAY DEPARTMENT

COUNTY OF NASSAU
DEPARTMENT OF PUBLIC WORKS
1194 PROSPECT AVENUE
WESTBURY, NEW YORK 11590-2723

RECD BY HIGHWAY DEPT
OCT 30 '19 AM8:57

October 22, 2019

Mr. Len Margolis, President
Locust Valley Chamber of Commerce
P.O. Box 178
Locust Valley, New York 11560

Re: Annual Tree Lighting Ceremony
Locust Valley Chamber of Commerce/Matinecock Neighborhood Association
Birch Hill Road - December 3, 2019, from 12:00 PM to 8:00 PM

Dear Mr. Margolis:

The Department is in receipt of your letter requesting the temporary closing of a parking area adjacent to Birch Hill Road (a County road whose R.O.W. includes the referenced parking area) on the above date between the hours of 12:00 PM to 8:00 PM.

In addition, the Certificate of Liability Insurance received naming the County of Nassau Department of Public Works as an additional insured has been reviewed and found to be satisfactory in indemnifying the County against any liabilities arising from the temporary parking lot closing.

It is suggested your office contact the Nassau County Police Department's Second Precinct (516-573-6200) regarding the temporary closing of the subject parking area to insure the orderly passage of vehicles on adjacent Birch Hill Road.

The Department, in the given instance, does not issue a permit for the above referenced temporary closing. This letter, however, will serve as approval by the Department for the temporary closing of the parking area adjacent to Birch Hill Road on December 3, 2019, between the hours of 12:00 PM to 8:00 PM.

We understand that last year's Tree Lighting Ceremony was well received by the community and again wish you well with this year's event.

If you require further assistance with this matter, please contact Mr. Daniel Davis, a member of my staff, at 516-571-6885.

Very truly yours,

Kenneth G. Arnold, P.E.
Commissioner of Public Works

KGA:WSN:jd
AIM W.O. 19-288958

c: Honorable Joshua A. Lafazan, 18th Legislative Dist.
Brian J. Schneider, Deputy County Executive for Parks and Public Works
Patrick Ryder Commissioner, Nassau County Police Department
William S. Nimmo, Deputy Commissioner of Public Works
Michael Fasano, Unit Head, Road Maintenance Unit
Jeff Lindgren, Traffic Engineer II
Kim Zervos, Town of Oyster Bay Department of Public Works
Daniel Davis, Project Manager

S:\SAN\Support Staff\Author\Davis, Daniel\2019 Locust Valley Chamber Tree Lighting AIM 19-288958.dd.doc

DATE: 10/30/19

TO: **HIGHWAY OPERATIONS**

SUBJECT: Locust Valley Chamber Christmas Tree Lighting

PLEASE DELIVER TO:

Birch Hill Road
Between Forest Ave
And Elm Street

CONTACT: Len Margolis
516-759-1133

DATE OF EVENT: 12/3/19

BARRICADES: **6**

CONES:

SORT PAILS:

PORTABLE LIGHTS:

GENERATOR:

PACKER:

DELIVER ON: **12/2/19**

PICKUP ON: **12/4/19**

SWEEPING BEFORE AFFAIR IS NEEDED: **YES** ____ **NO** XX

Please be advised that when signing on receipt of Town Equipment, your organization will be held responsible for their return.

JOHN P. BISHOP, DEPUTY COMMISSIONER
HIGHWAY DEPARTMENT

JPB/kaz

CC: Doug Robalino, General Foreman 002
Peter Brown, Regional Foreman 009
Jim Ajamian, Area Foreman 011
Jeff VanNostrand

Public Safety Division
Dan Kornfeld

Meeting of November 19, 2019 Resolution No. 706-2019

WHEREAS, Joseph Nocella, Town Attorney, and Matthew M. Rozea, Deputy Town Attorney, by memorandum dated November 7, 2019 advised that on August 19, 2019, a Judgment was entered in the action *Robert O. Ripp v. Town of Oyster Bay, et al.*; and

WHEREAS, pursuant to the Judgment, the Court directed the Town to pay Petitioner the total amount of $405.00 in statutory costs and disbursements; and

WHEREAS, Messrs. Nocella and Rozea, by the aforementioned memorandum, advised that Petitioner executed a Town of Oyster Bay Claim Form and Satisfaction of Judgment, and they therefore recommended and requested that the Town Board authorize payment in order to fully satisfy the Judgment,

NOW, THEREFORE, BE IT RESOLVED, That the recommendation and request as hereinabove set forth is accepted and approved, and the Comptroller is hereby authorized and directed to make payment to Robert O. Ripp, 77 Sunset Road, Massapequa, New York, in an amount not to exceed $405.00, with funds to be drawn from Account No. OTA A 1420 44110 000 0000, upon submission of a duly certified claim, after audit

-#-

Reviewed By
Office of Town Attorney

The foregoing resolution was declared adopted after a poll of the members of the Board; the vote being recorded as follows:

Supervisor Saladino	Aye
Councilman Muscarella	Aye
Councilman Macagnone	Aye
Councilwoman Johnson	Aye
Councilman Imbroto	Aye
Councilman Hand	Aye
Councilman Labriola	Aye

Town of Oyster Bay
Inter-Departmental Memo

TO: Memorandum Docket

FROM: Office of the Town Attorney

DATE: November 7, 2019

SUBJECT: Satisfaction of Judgment

On August 19, 2019, a Judgment was entered in the action *Robert O. Ripp v. Town of Oyster Bay, et al*, pursuant to which the Respondents were directed to pay the Petitioner statutory costs and disbursements in the amount of $405.00.

The Petitioner executed a Town of Oyster Bay Claim Form and a Satisfaction of Judgment, copies of which are attached hereto. Inasmuch as the Satisfaction of Judgment is being held by this Office in escrow pending payment of the Petitioner's claim (and cannot be filed until such payment is made), this Office recommends and requests that the Town Board authorize payment to the Petitioner in the amount of $405.00 in full satisfaction of the Court's Judgment.

Funds for the payment are available in Account No. OTA A 1420 44110 000 0000.

JOSEPH NOCELLA
TOWN ATTORNEY

Matthew M. Rozea
Deputy Town Attorney

MMR:mmr
Attachments

cc: Town Attorney (with 9 copies)

Matter No. 2017-4288.001

S:\Attorney\RESOS 2019\MD & RESO\Ripp Fee Award Payment MMR.docx

TOWN OF OYSTER BAY
CLAIM
AUDREY AVENUE, OYSTER BAY, NEW YORK 11771

TAXPAYER IDENTIFICATION NUMBER
FEDERAL ID # ☐ SOCIAL SECURITY # ☐

CLAIMANT'S NAME Robert O. Ripp	CONTRACT # Not Applicable	ORDER #
CLAIMANT'S ADDRESS 77 Sunset Road, Massapequa, New York 11758	CONTRACT NAME Not Applicable	
TOWN DEPARTMENT Town Attorney	CLAIMANT INVOICE #	RESO #

FOLLOW INSTRUCTIONS ON REVERSE SIDE THEN RETURN CLAIM AND INVOICES TO DEPARTMENT RECEIVING MATERIALS OR SERVICES

DETAILED DESCRIPTION OF MATERIALS OR SERVICES

DATE	DESCRIPTION	UNIT PRICE	TOTAL
10/10/2019	Payment of Judgment dated and entered on August 15, 2019 in the Office of the		$405.00
	Nassau County Clerk, in the action entitled "Robert O. Ripp v. The Town of		
	Oyster Bay, et al." Nassau County Index No. 001834/2017. A duly executed		
	satisfaction of judgment will be filed with the Clerk upon payment in full.		

Invoice # _____
MK approved for payment

THE BELOW CERTIFICATION MUST BE PROPERLY FILLED OUT BY THE CLAIMANT

I HEREBY CERTIFY the above articles were sold and delivered and or the above service rendered to the Town of Oyster Bay on the dates and for the prices or amounts billed; that the above bill is just, true and correct; that no part thereof has been paid except as stated therein and that the balance there stated in the amount of

TOTAL AMOUNT	$405.00
CASH DISCOUNT %	Not Applicable
NET AMOUNT	$405.00

is actually due and owing, and that taxes from which the Town of Oyster Bay is exempt are excluded therefrom.

CLAIMANT FURTHER CERTIFIES that the unit prices charged herein are not higher than those charged to any governmental or commercial consumer for like deliveries.

Signature _____ Date 10/16/19

Print or type name Robert O. Ripp

Title _____

Name of Company _____

16th October 2019
JOHN S REGIS
Notary Public, State of New York
No. 01RE6346762
Qualified in Nassau County
Commission Expires Aug. 22, 2020

I HEREBY APPROVE this claim form for the sum of $405.00 for the services, disbursements and materials herein indicated which were actually performed and were for the Town of Oyster Bay.

Signature _____ Title TOWN ATTORNEY Date 10/16/19

Department TOWN ATTORNEY Account _____

Judgment was recorded on August 21, 2019 in the Office of the Clerk of the County of Nassau; and

SAID Judgment has been fully paid and the sum of $0.00 remains unpaid;

AND, it is certified that there are no outstanding executions with any Sheriff or Marshal within the State of New York,

NOW, THEREFORE, Satisfaction of said Judgment is hereby acknowledged, and the said Clerks are hereby authorized and directed to make an entry of said Satisfaction on the

docket of said Judgment.

Dated: Massapequa, New York
10/16, 2019

Robert O. Ripp, Petitioner
77 Sunset Road
Massapequa, New York 11758

STATE OF NEW YORK)
) ss.:
COUNTY OF NASSAU)

On the 16th day of October, 2019, before me, the undersigned, a Notary Public in and for said State, before me personally came Robert O. Ripp, personally known to me or proved to me on the basis of satisfactory evidence to be the individual whose name is subscribed to the within instrument and acknowledged to me that he executed the same, and that by his signature on the instrument, the individual, or the person upon behalf of which the individual acted, executed the instrument.

Sworn to before me this
16th day of October, 2019

GARVIN S REGIS
Notary Public, State of New York
No. 01RE6346762
Qualified In Nassau County
Commission Expires Aug. 22, 2020.

NOTARY PUBLIC

WHEREAS, the American Red Cross has requested permission to use and occupy a 2,250 square foot portion of land at the Department of Public Works facility located at 150 Miller Place, Syosset, New York 11791 pursuant to the attached license agreement for the storage of three (3) trailers and two (2) trucks; and

WHEREAS, the proposed use of the premises and the terms of this license agreement are consistent with other current use and possession agreements at the Department of Public Works facility; and

WHEREAS, Joseph Nocella, Town Attorney and Frank M. Scalera, Chief Deputy Town Attorney, by memorandum dated November 7, 2019, request that the Town Supervisor be authorized and directed to execute the attached license agreement with the American Red Cross for the use of the premises at the Department of Public Works facility,

NOW, THEREFORE, BE IT RESOLVED, that the abovementioned recommendation is hereby accepted and approved, and the Town Supervisor or his designee is hereby authorized and directed to execute a license agreement with the American Red Cross, for the use of a 2,250 square foot portion of land at the Department of Public Works facility for a license fee amount of $1 per year, pursuant to the attached license agreement, for the storage of three (3) trailers and two (2) trucks.

-#-

Reviewed By Office of Town Attorney

The foregoing resolution was declared adopted after a poll of the members of the Board; the vote being recorded as follows:

Supervisor Saladino	Aye
Councilman Muscarella	Aye
Councilman Macagnone	Aye
Councilwoman Johnson	Aye
Councilman Imbroto	Aye
Councilman Hand	Aye
Councilman Labriola	Aye

Town of Oyster Bay
Inter-Departmental Memo

TO : Memorandum Docket

FROM : Office of the Town Attorney

DATE : November 7, 2019

SUBJECT: License Agreement for the Use of Property at 150 Miller Place, Syosset, New York 11791 by the American Red Cross

---

The Department of Public Works (DPW) seeks to provide a License Agreement for the use and occupancy of 2,250 square feet of land at the DPW Facility located at 150 Miller Place, Syosset, New York 11791 to the American Red Cross for a license fee of $1 per year. Said parcel is not being utilized by the Town. This Office has prepared the license agreement, and hereby requests that the Town Supervisor or his designee be authorized and directed to execute such agreement.

JOSEPH NOCELLA
TOWN ATTORNEY

Frank M. Scalera
Chief Deputy Town Attorney

FMS:mek
Attachment
Town Attorney (w 9/copies)

S:\Attorney\RESOS 2019\MD & RESO\MD License Agreement Red Cross.doc

WHEREAS, the American Red Cross has requested permission to use and occupy a 2,250 square foot portion of land at the Department of Public Works facility located at 150 Miller Place, Syosset, New York 11791 pursuant to the attached license agreement for the storage of three (3) trailers and two (2) trucks; and

WHEREAS, the proposed use of the premises and the terms of this license agreement are consistent with other current use and possession agreements at the Department of Public Works facility; and

WHEREAS, Joseph Nocella, Town Attorney and Frank M. Scalera, Chief Deputy Town Attorney, by memorandum dated November 7, 2019, request that the Town Supervisor be authorized and directed to execute the attached license agreement with the American Red Cross for the use of the premises at the Department of Public Works facility,

NOW, THEREFORE, BE IT RESOLVED, that the abovementioned recommendation is hereby accepted and approved, and the Town Supervisor or his designee is hereby authorized and directed to execute a license agreement with the American Red Cross, for the use of a 2,250 square foot portion of land at the Department of Public Works facility for a license fee amount of $1 per year, pursuant to the attached license agreement, for the storage of three (3) trailers and two (2) trucks.

-#-

Reviewed By
Office of Town Attorney

TOWN OF OYSTER BAY
LICENSE AGREEMENT

DATED: This license agreement ("License Agreement") is dated and effective as of November ___, 2019.

PARTIES: **TOWN OF OYSTER BAY,** a municipal corporation of the State of New York, having its principal office at Town Hall, Audrey Avenue, Oyster Bay, New York 11771, hereinafter referred to as the "Town", and

AMERICAN NATIONAL RED CROSS, a nonprofit, charitable corporation chartered by an act of the United States Congress and organized and operated for charitable purposes, having its headquarters located at 431 18thStreet, NW, Washington, DC 20006, hereinafter referred to as the "Licensee".

LICENSED PREMISES: Approximately 2,250 square feet of Town owned property located at and being part of the Department of Public Works (DPW) located at 150 Miller Place, Syosset, N.Y. 11791, which parcel is more specifically diagramed on Schedule A attached hereto and made part hereof (interchangeably referred to herein as the "Licensed Premises" or the "Premises"), and which parcel is part of the Town owned land shown on the Tax map of Nassau County.

WITNESSETH:

WHEREAS, LICENSEE has requested permission to access, use and occupy the Premises pursuant to this License Agreement for the day and night storage of the following vehicles and trailers: One (1) twelve (12) foot cargo trailer, one (1) sixteen (16) foot cargo trailer, one (1) twenty (20) foot flatbed trailer one (1) twenty (20) foot box truck and one (1) sixteen (16) foot box truck;

WHEREAS, the proposed use of the Premises and the terms of this License Agreement are consistent with other current use and possession agreements and the applicable written policies and procedures of the DPW; and

WHEREAS, by Resolution No. _____, adopted _____ the Town Board of the Town of Oyster Bay accepted and approved the Licensee's request and authorized and directed the Town Supervisor to execute this License Agreement with the Licensee for the Premises.

NOW, THEREFORE, in consideration of the mutual benefits, covenants and agreements hereinafter contained, the parties hereto agree as follows:

1. **License/Use of Premises.** Permission by the Town is hereby granted to the Licensee to have possession, occupancy and use of the Premises (which, as previously set forth, is more particularly described in Schedule A attached hereto) by license (this "License") during the Term (as hereinafter defined), subject, at all times to the Town's right to terminate this License Agreement, and the aforementioned license upon the conditions set forth in paragraph 4 hereof. The Licensee shall utilize the Licensed Premises for the possession, occupancy, use and storage of the above mentioned vehicles and trailers.

The Licensee shall be granted access to the Premises Monday through Friday from 7am to 3pm through the front gate on Miller Place, Syosset, New York. The gates will be closed after 3pm and weekends. Licensee and all of its employees and agents shall at all times check in with Public Safety upon entering and exiting the Premises. Licensee may obtain access to the Premises during off hours and weekends for emergency reasons only by checking in with Public Safety prior to entering and exiting the Premises.

At all times, the Licensee shall further limit its use and occupancy of the Premises to those uses and activities as are permitted by law and in accordance with this Agreement.

2. **Term.** The term of the license (the "Term") herein shall be for a period of one (1) year from and including the commencement date of November 1, 2019 through and including October 31, 2020, subject to the terms and conditions set forth in paragraphs 4 and other applicable provisions of this License Agreement.

3. **License Fee.**

(a) **Initial Base License Fee.** Through October 31, 2020, the annual license fee (hereinafter Fee) shall be One ($1) dollar per year. Such fee shall be payable by Licensee to the Town upon the full execution of this Agreement and upon the anniversary of any renewal period granted by the Town.

(b) **Renewal Periods.** Licensee shall be allowed two (2) one (1) year renewal periods at the sole discretion of the Town and subject to Town Board approval.

(c) **No Right of Offset Etc.** Licensee shall in no event be entitled to any abatement of or reduction in License Fee or right of offset of any kind and description except as herein expressly provided. The Town shall receive all Fee as provided free and clear of any and all impositions, encumbrances, charges, obligations or expenses of any nature whatsoever in connection with the ownership and operation of the Premises. Licensee shall at all times keep the Licensed Premises free and clear of any encumbrances, liens, mechanic's liens, public improvement liens, and any other matters that may affect the quality and marketability of title to the Licensed Premises.

4. **Licensed Terminable upon Written Notice by Town.** This License Agreement is terminable at will by the Town or by the Licensee upon forty-five (45) days' prior written notice to the other party. The Term shall expire and the obligations of the Town under this License Agreement shall terminate on the date set forth in any such notice. On the date set forth in such notice for termination of this License Agreement, the Licensee shall surrender possession of the Licensed Premises in the condition required as if the Term had expired on such date and otherwise in accordance with this License Agreement. All indemnities, covenants and all applicable obligations under this License Agreement of the Licensee that accrue or had accrued or are otherwise outstanding through such termination date and through the delivery of possession (and in the condition required by this Agreement) shall survive the termination of this License Agreement, Fee shall be pro-rated as of the said termination date. Licensee shall not be entitled to any compensation or other consideration upon the termination of this License Agreement by the Town.

5. **Grading/Alterations Etc.** Any preparation, grading or alternation of the Licensed Premises, including the land or appurtenances thereon, that may be necessary or required for Licensee's intended use hereunder shall be the sole responsibility of Licensee and shall be made at its own cost and expense, provided, however that the plans for such preparation, grading or alteration of the land or appurtenances

thereof shall first be submitted to the Commissioner of the Department of Public Works of the Town, or his duly appointed representative, and his written approval obtained thereof. In addition, site drainage on the Premises will be the sole responsibility of the Licensee. Any material changes in the use of the Premises shall be subject to the approval of the Town which approval may be denied for any or no reason. Any proposed structures or improvements, at the discretion of the Town, shall be subject to its approval both prior to and after their installation (if Town approval was not previously obtained.) Notwithstanding anything to the contrary in this License Agreement, Licensee shall not utilize the Premises, or do anything with respect to the Premises, unless and until it complies fully with all applicable legal requirements. In the event the Licensee requests approval of any alterations and improvements upon the Licensed Premises, in addition to other conditions, the Town may require a performance bond.

6. **Transcription to and from Licensed Premises.** Licensee, covenants, represents and warrants to the Town that at all times that it is in possession of and/or utilizing the Premises, all trucks and trailers entering and leaving the Licensed Premises shall enter the premises through the main gate on Miller Place, Syosset, New York and shall check in with the Public Safety officer on duty. This provision is a material inducement for the Town to enter into this License Agreement and a violation of this shall be deemed a material breach of this License Agreement. Licensee shall cause all drivers of such vehicles to comply with the restrictions set forth in this paragraph with respect to the Licensed Premises.

7. **Licensee Responsible for Expenses/Costs/Taxes Concerning Premises.**

(a) **Licensee Responsible for all Costs and Expenses Pertaining to Premises.** Licensee shall be obligated to pay any and all costs and expenses of any nature relating or pertaining to the Licensed Premises. Without limitation, Licensee shall pay to the parties respectively entitled thereto, all impositions, insurance premiums, operating charges, maintenance charges, construction costs, taxes, assessments, utilities and any and all other charges, costs and expenses which arise respect to the Licensed Premises

or are required for the Premises to comply with law or may otherwise be contemplated under this License Agreement during the Term hereof.

(b) **Taxes.** For any period during the Term (and during any extension thereof), Licensee shall be directly liable for and shall pay promptly when due at all times (i) all taxes, assessments, and governmental charges including (without limitation) all ad valorem and other real estate taxes, whether federal, state, or municipal and whether they are imposed by taxing or management districts or authorities, that accrue or are assessed against the Licensed Premises and any and all improvements thereon, and whether they are direct payments to the government authority in question or payments in substitution for or in lieu of such charges; and (ii) all governmental levies, assessments or other taxes or charges directly on the rent, or a franchise tax, assessment, levy or charge measured by or based, in whole or in part, upon rent or any license fee. All such items in (i) and (ii) are collectively "Taxes" and are intentionally meant to include all such charges assessed with respect to the Licensed Premises and/or billed to the Town of any other person, whether presently existing or hereinafter created or otherwise required to be paid by law. Licensee shall pay, additionally, before delinquency all taxes levied or assessed against any personal property, fixtures or alterations placed in or upon the Licensed Premises. Licensee shall pay all Tax and all other related bills pertaining to this paragraph promptly when due and in all cases before delinquency (and, if applicable, prorated for during the Term of this License). Upon reasonable prior notice to Town, Licensee, at its sole cost and expense, shall have the right to reasonable contest the amount of any such Taxes levied against the Licensed Premises provided that the Licensee shall not take any such action which will cause or allow the Town to suffer any liability for such Taxes or otherwise suffer any liability or expense of any kind and description relating thereto. Licensee hereby indemnifies Town from and against any and all liability, cost, claim or expense (including reasonable legal fees incurred by the Town) in connection with any such contest and Taxes, generally. The Town's cooperation in connection with any such contest and Licensee's right to challenge any of the Taxes are conditioned upon such indemnification by Licensee and the prompt payment to Town upon demand of

all its costs and expenses relating thereto (including, without limitation reasonable legal fees and expenses and the expenses of any and all consultants).

(c) **Licensee to Timely Pay Costs/Expenses.** All of the above such charges, costs and expenses shall be paid timely, and upon the failure of Licensee to pay any such costs, charges or expenses, the Town shall have the right to terminate this License Agreement upon five (5) days' written notice in accordance with paragraph 14 hereof, and shall have and concurrently retain all such other rights and remedies as may be permitted by law.

8. **Condition of Licensed Premises at End of Term.** Upon the expiration of Term or the date of cancellation of the License under Paragraph 4 or 14 or otherwise, as the case may be, the Licensed Premises shall be returned to the Town, free and clear of any waste and debris, and free and clear of all of Licensee's personal property, and in good and sanitary condition and free and clear of all liens and encumbrances; and upon the written request of the Town at any time prior to or after the Term or expiration of the License herein, the Licensee shall, at its own cost and expense, restore and rehabilitate said land and appurtenances thereon to its original condition, all to the reasonable satisfaction of the Commissioner of Public Works of the Town, or his duly appointed representative, and his opinion and directives shall be binding upon the respective parties hereto. However, the existing improvements and fixtures upon the Licensed Premises shall remain undisturbed and in good condition by the Licensee unless the Town shall require such improvements to be removed and/or lawfully demolished. The requirement to surrender the Licensed Premises in accordance with the terms hereof shall survive the termination of this agreement.

9. **Acceptance of Licensed Premises/Waivers by Licensee.** The Licensee waives any and all claims for compensation from the Town for any and all loss and damage sustained by reason of any defect, deficiency, or impairment or the Licensed Premises, the condition of which the Licensee has accepted and assumed. Licensee has accepted the Licensed Premises "as is" with all faults and conditions and without relying upon any representations of the Town, or it representatives. In the event that a claim

or adjudication is made that the Town has acted unreasonably or unreasonably delayed acting in any case where by law or under this License Agreement, it has an obligation to act reasonably or promptly, the Town shall not be liable for any punitive, consequential or incidental damages, and the Licensee's sole remedies shall be limited to commencing an action seeking injunctive relief or declaratory judgment. The Licensee covenants and agrees that in no event shall the Town be liable for consequential damages and, to the fullest extent permitted by law, the Licensee expressly irrevocably waives all existing and future claims that it may have against the Town for consequential damages. LICENSEE HEREBY KNOWINGLY, VOLUNTARILY AND INTENTIONALLY WAIVES THE RIGHT TO ASSERT A COUNTERCLAIM, OTHER THAN A COMPULSORY COUNTERCLAIM, IN ANY ACTION OR PROCEEDING BROUGHT AGAINST IT BY THE TOWN OR ITS AGENTS, AND KNOWINGLY, VOLUNTARILY AND INTENTIONALLY WAIVES ANY RIGHT TO TRIAL BY JURY IN RESPECT OF ANY ACTION OR PROCEEDING BASED ON, OR ARISING OUT OF, UNDER, OR IN CONNECTION WITH THIS LICENSE AGREEMENT OR ANY COURSE OF CONDUCT, COURSE OF DEALING, STATEMENTS (WHETHER VERBAL OR WRITTEN), OR ACTIONS OF THE TOWN . LICENSEE'S AGREEMENT TO THE PROVISIONS OF THIS SECTION IS A MATERIAL INDUCEMENT FOR TOWN GRANTING THE LICENSE.

10. **Modification/Assignment.** This Agreement may be modified from time to time by Agreement, in writing, duly executed by the parties. Oral modifications are ineffective to bind the Town. Licensee may not assign, or otherwise transfer, all or any part of its interest in this agreement or in the Premises without the prior written consent of the Town, which may be withheld for any reason or no reason without any liability to the Town. Licensee may not sub-license the Licensed Premises without the written permission of the Town which permission may be withheld for any or no reason without any liability to the Town. The permission of the Town granting the use of said Licensed Premises is made only to the Licensee, and may not, without the express written consent of the Town, be transferred or assigned to any other firm or person.

11. **Insurance.** The Licensee shall obtain, and furnish evidence of, insurance for the benefit of the Town with respect to such coverages, such amounts and such limits as the Town shall require from time to time. Without limitation, the Licensee shall initially obtain coverage and provide Certificates of Insurance with respect to comprehensive general liability in amounts per occurrence of not less than $1,000,000.00 and shall name the Town as additional named insured. The Licensee shall further insure its vehicles as required by law and shall further insure its other property and equipment, which may at any time, be upon the Licensed Premises, and name the Town as an additional insured therein. Licensee shall provide evidence to the Town of Worker's Compensation Insurance Coverage. All such certificates shall provide that the Town be given 30 days' prior written notice of termination of coverage or default under the contract of insurance or non-payment of premium. To the extent permissible under the insurance contract and pursuant to the certificate, the Town shall have thirty (30) days after the receipt of said notice to cure such default so that the applicable insurance may continue, but the Town shall have no obligation to take any such action, Failure to maintain and supply evidence of insurance to the Town shall be a material default under this License Agreement.

12. **Further Provisions on Use of Premises and Compliance with Law.** The Licensee shall not undertake any activity that may commit waste of the Premises. Licensee shall not interfere with Town functions or cause a public nuisance, other unreasonable disturbances, excessive noise or noxious odors. Licensee shall take good care of the Licensed Premises and maintain same in a reasonably clean, sanitary and safe condition. Licensee shall promptly comply and cooperate with any and all requests that may be reasonably necessary or prudent in order for the Town to comply with law. Licensee shall promptly comply with every law, statue, rule, ordinance, regulation, and notice of any municipal, county, state, federal or other authority having jurisdiction of the Licensed and pertaining to such Premises and shall promptly correct and/or cure any and all violations imposed by any governmental agency with respect to the Licensed Premises. Under no circumstances shall the Licensed Premises be used for any unlawful, illegal or immoral purpose whatsoever.

13. **Termination of License for Default.** If either (i) Licensee fails to pay the Rent or any other sums due the Town or any other cost for which it is responsible hereunder within ten (10) days of written demand; or (ii) if there is any other breach of any other term, covenant and/or condition of this License Agreement by the Licensee, the Town may terminate this License Agreement (resulting in an expiration of the Tern and the License granted herein) upon only five (5) days' written notice. This termination provision is in addition to the right of the Town to terminate the License under paragraph 4 hereof and any and all other rights the Town may have under the law. In addition, the Town retains and reserves any and all rights and remedies with respect to this License Agreement and the Licensed Premises. In the event that the Licensee shall fail to pay any sums due the Town when due under this agreement, then without limitation of the forgoing, upon demand of the Town, the Licensee shall pay interest on the amounts not paid at the rate of ten (10%) percent per annum form the date of such demand. If the Licensee holdover and remains in occupancy after the expiration of the License herein, the Licensee shall pay twice the Fee during such period of impermissible occupancy, which fee is agreed to be reasonable under those circumstances and the payment thereof shall in no way limit, delay or impair the right of the Town to lawfully remove the Licensee from the Licensed Premises.

14. **Notices.** All notices, demands and requests given or required to be given by, pursuant to, or relating to, this License Agreement shall be in writing, All notices shall be deemed to have been properly given if hand delivered or if mailed by United States registered or certified mail, with return requested, postage prepaid, or by United States Express mail or FEDEX or other comparable overnight courier service to the parties at the addresses set forth below (or at such other addresses as shall be given in writing by any party to the others):

<u>If to the Town:</u>

THE TOWN OF OYSTER BAY
Town Hall
54 Audrey Avenue
Oyster Bay, New York 11771
Attention: Town Attorney

If to Licensee:

THE AMERICAN RED CROSS
431 18TH STREET NW,
WASHINGTON, D.C.20006

A notice shall be deemed to have been given: in the case of hand delivery, at the time of delivery; in the case of registered or certified mail, when delivered or two Business Days after mailing; or in the case of overnight courier service, on the Business Day after the same was sent. A party receiving a notice that does not comply with the technical requirements for the notice under this section may elect to waive any deficiencies and treat the notice as having been properly given. Licensee shall not be entitled to any notices of any notices of any nature whatsoever from the Town except with respect to matters for which this agreement specifically and expressly provides for the giving of notice.

15. **Environmental Covenant and Indemnity.** During Licensee's occupation and possession of the Licensed Premises, it shall keep the Licensed Premises free from the introduction and release of Hazardous Materials (as hereinafter defined). During the Term and thereafter, the Licensee hereby indemnifies and holds the Town harmless from and against the presence of any and all Hazardous Substances entering or released upon the Licensed Premises introduced as of the commencement date of this License Agreement, by the Licensee and its agents, invitees, guests, representatives or anyone (other than the Town's agents or employees) entering the Licensed Premises (whether or not on Licensee's behalf) (and during any extensions or holdovers thereof), including without limitation, from and in connection with Licensee's vehicles and/or equipment or operations. Licensee covenants that the Premises shall, as of the commencement date hereof, not be used to generate, manufacture, refine Hazardous Materials, and Licensee shall not cause or permit a release of Hazardous Materials onto the Premises or onto any other neighboring property or suffer the presence of Hazardous Materials on the

Premises. Licensee may, however, lawfully operate and store its equipment and vehicles on the Licensed Premises in a safe and sanitary manner, notwithstanding the fact that such vehicles and equipment utilize petroleum products. Reasonable care shall be taken by the Licensee, however, to safeguard the Licensed Premises from the release of Hazardous Materials in and around the Licensed Premises. Without limitation, Licensee shall comply with, and ensure compliance by all occupants or the Premises with, all applicable federal, state and local laws, ordinances, rules or regulations, with respect to Hazardous Materials, and shall keep the Property free and clear of any liens imposed pursuant to such laws, ordinances, rules or regulations. The term "Hazardous Materials" as used in this License Agreement shall include, without limitations, gasoline, petroleum products, explosives, radioactive materials, hazardous materials, hazardous waste, hazardous or toxic substances, polychlorinated biphenyls or related or similar materials, asbestos or any material containing asbestos, or any other substance, the use of which is restricted, or otherwise regulated by any federal, state or local environmental law, ordinance, rule or regulation. The Licensee hereby indemnifies the Town and agrees to hold the Town harmless from and against any and every kind whatsoever (including reasonable attorneys' fees) paid, incurred, or suffered by or asserted against the Town at any time for, with respect to, or as a direct result of (i) Licensee's introduction during the Term on or under the Premises of Hazardous Materials or (ii) the escape, seepage, leakage, spillage, discharge, emission, or release from the Premises, or into or upon any affected land, or any related or nearby or affected atmosphere, or any affected watercourse, body of water, or wetland at any time during Licensee's occupancy, use, or possession of the Licensed Premises, of any Hazardous Materials (introduced to the Licensed Premises during the Term or any period of Licensee's occupancy thereof) or (ii) Licensee's non-compliance with respect to any federal, state, or local statute, law, ordinance, code, rule, regulation, order, or decree regulating to, or imposing liability or standards of conduct concerning any Hazardous Materials. The Licensee fully understands that this paragraph is a material inducement to the Town making this License Agreement. The obligations and liabilities of Licensee under this paragraph shall survive the expiration of the Term and termination of this License Agreement.

16. **Indemnification of the Town by the Licensee/Assumption of Risk.** The Licensee agrees that the Town shall be free from all liabilities and claims for damages and/or suits for and by reason of any injury or loss to any person or property of any kind whatsoever on or in connection with the Licensed Premises to the extent caused by Licensee or its agents from the date of Licensee's occupancy of the Premises. Licensee covenants and agrees to indemnity and save harmless the Town from any and all liabilities, charges, claims, damages, losses, costs and expenses (including reasonable attorneys' fees) to the extent caused by Licensee and arising or pertaining with respect to or in connection with the Licensee's use, operation and/or occupancy of the Licensed Premises during the Term and with respect to anything pertaining to the Premises during Licensee's use and occupancy thereof. The Licensee assumes all risks in the operation of the Licensed Premises and agrees to comply with all federal, state, and local law and regulations, including without limitation, all municipal rules, regulations and ordinances of the Town, which in any way related to the Licensed Premises.
17. **Advertising/Signs.** Any advertising on or around the Licensed Premises, including signage, shall be subject to the written approval of the Town.
18. **Entire Agreement/Counterparts/Electronic Signatures.** It is understood and agreed that this License Agreement embodies the entire understanding of the parties with regard to the Licensed Premises, and may not be extended or modified except in writing, and subscribed by both parties hereto. This License Agreement may be executed in any number of duplicate originals, and each duplicate original shall be deemed to be original. This License Agreement may be executed in any number of counterparts; each of which counterpart shall be deemed an original and all of which together constitute a fully executed agreement even though all signatures do not appear on the same document. The License Agreement may also be signed and delivered utilizing electronic signatures sent via electronic mail in "pdf" format. Such electronic signatures shall be binding upon the signatory.
19. **Captions.** The captions are inserted only as a matter of convenience and for reference, and in no way define, limit, or describe the scope or intent of any provisions of this License Agreement.

20. **Consent to Jurisdiction.** Licensee hereby irrevocably consents to the jurisdiction of the State of New York and to the Supreme Court of the State of New York, Nassau County, for the purpose of any suit, action or other proceeding arising out of or relating to this License Agreement or the subject matter hereof. Licensee hereby waives, and agrees not to assert, any such suit, action or proceeding any claim that it is not personally subject to such jurisdiction, or any right to remove an action brought in State to Federal Court, or any claim that such suit, action or proceeding is in an inconvenient forum or that the venue thereof is improper. Licensee agrees that service in any such action, whether or not in either such jurisdiction, may be effectuated by means in accordance with the notice provisions of this License Agreement or by any other means of service allowed by law.

REMAINDER OF PAGE INTENTIONALLY LEFT BLANK

21. **Applicable Law.** This License Agreement and the obligations arising hereunder shall be governed by, and construed in accordance with, the laws of the State of New York and any applicable law of the United States of America.

IN WITNESS WHEREOF, the parties hereto have signed this agreement the day and year first above written.

TOWN OF OYSTER BAY

_____

Supervisor

AMERICAN NATIONAL RED CROSS

_____

Name:
Title:

REVIEWED:

Elizabeth A. Faughnan

_____

Deputy Town Attorney

STATE OF NEW YORK)
) ss.:
COUNTY OF NASSAU)

On this day of , 2019, before me personally came and appeared _____, to me known, who, being by me duly sworn, did depose and say that he is the _____ of the Town of Oyster Bay, the municipal corporation described herein and which executed the foregoing instrument; that by virtue of the authority conferred on him by law, he subscribed his name to the foregoing instrument and that he executed the same for the purpose therein mentioned.

_____
Notary Public

STATE OF NEW YORK)
) ss.:
COUNTY OF NASSAU)

On this day of , 2019, before me personally came and appeared _____, to me known, who, being by me duly sworn, did depose and say that he/ is the _____ of the AMERICAN NATIONAL RED CROSS, the nonprofit described herein and which executed the foregoing instrument; that by virtue of the authority conferred on him/her by law, he/she subscribed his/her name to the foregoing instrument and that he/she executed the same for the purpose therein mentioned.

_____
Notary Public

Schedule A

Diagram of the Licensed Premises

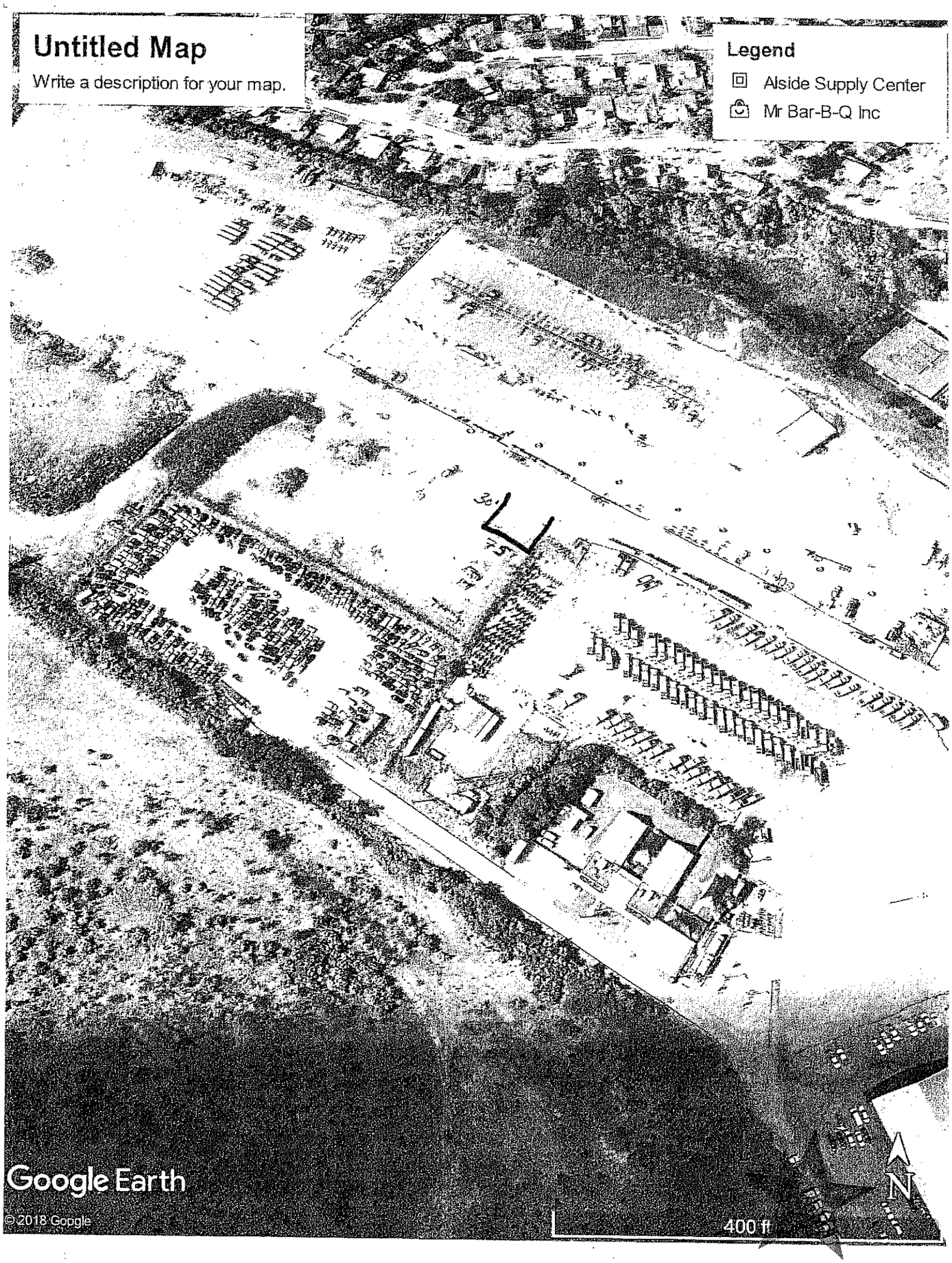
Untitled Map
Write a description for your map.
Legend
Alside Supply Center
Mr Bar-B-Q Inc
Google Earth
© 2018 Google
400 ft
N

Reviewed By Office of Town Attorney

WHEREAS, Frank V. Sammartano, Commissioner, Department of Intergovernmental Affairs, by memoranda dated November 4, 2019 and November 8, 2019, advised that the Department of Intergovernmental Affairs published a request for proposals for staffing support/leasing services of contract employees to assist with such programs as the Workforce Innovation and Opportunity Act, the Temporary Assistance for Needy Families, and the Community Development Block Grant Program; and

WHEREAS, in response to the request for proposals, one (1) response was received from Alcott HR Group, LLC, which response was reviewed pursuant to the Town Procurement Policy and found to meet all requirements of the request for proposals; and

WHEREAS, Joseph Nocella, Town Attorney, and Dennis P. Sheehan Deputy Town Attorney, by memorandum dated November 1, 2019, advised that in accordance with Guideline 7 of the Town Procurement Policy, the Department of Intergovernmental Affairs made sufficient and adequate efforts to secure the required number of proposals; and

WHEREAS, Commissioner Sammartano, by the aforementioned memoranda, requested that the Town Board authorize the Supervisor, or his designee, to execute an agreement with Alcott HR Group, LLC, the term beginning from January 1, 2020 through December 31, 2020, in the total amount of $809,757.66, with the option for three (3) one-year extensions, with funds to be drawn from Account Nos. IGA CD 6293 48080 000 CW19, IGA CD 6293 48080 000 CW20, IGA CD 6293 47850 000 CW20, and CMP A 1315 48080 000 0000,

NOW, THEREFORE, BE IT RESOLVED, That the request as hereinabove set forth is accepted and approved, and the Supervisor, or his designee, is authorized to execute an agreement with Alcott HR Group, LLC, for the term beginning from January 1, 2020 through December 31, 2020, with the option for three (3) one-year extensions, and be it further

RESOLVED, That the Comptroller is hereby authorized and directed to make payment for same, upon presentation of a duly certified claim, after audit, with funds to be drawn from Account Nos. IGA CD 6293 48080 000 CW19 in the amount of $193,632.79, IGA CD 6293 48080 000 CW20 in the amount of $193,632.79, IGA CD 6293 47850 000 CW20 in the amount of $296,492.08, and CMP A 1315 48080 000 0000 in the amount of $126,000.00, for a total amount of $809,757.66.

-#-

The foregoing resolution was declared adopted after a poll of the members of the Board; the vote being recorded as follows:

Supervisor Saladino	Aye
Councilman Muscarella	Aye
Councilman Macagnone	Aye
Councilwoman Johnson	Aye
Councilman Imbroto	Aye
Councilman Hand	Aye
Councilman Labriola	Aye

15

TOWN OF OYSTER BAY

INTER-DEPARTMENTAL MEMO

TO: MEMORANDUM DOCKET

FROM: FRANK V. SAMMARTANO, COMMISSIONER
INTERGOVERNMENTAL AFFAIRS

DATE: NOVEMBER 4, 2019

SUBJECT: AUTHORIZATION FOR STAFF SUPPORT/LEASING SERVICES CONTRACT

In connection with the above referenced matter, kindly reserve a space on the Town Board Action Calendar for the meeting of November 19, 2019. Details will follow by supplemental memorandum.

Frank V. Sammartano
Commissioner

cc: Town Attorney w/9 copies

10

TOWN OF OYSTER BAY

Inter-Departmental Memo

TO: MEMORANDUM DOCKET

FROM: FRANK V. SAMMARTANO, COMMISSIONER
INTERGOVERNMENTAL AFFAIRS

DATE: NOVEMBER 8, 2019

SUBJECT: SUPPLEMENTAL MEMORANDUM TO MD 11/5/19; ITEM # 15
AUTHORIZATION FOR STAFF SUPPORT/LEASING SERVICES CONTRACT

The Department of Intergovernmental Affairs published a Request for Proposals soliciting proposals for the provision of Staffing Support/Leasing Services of contract employees to work on programs including but not limited to the Workforce Innovation and Opportunity Act, the Temporary Assistance for Needy Families and the Community Development Block Grant Program for the period January 1, 2020 through December 31, 2020, with the option of three (3) one-year extensions. In response to the RFP, one proposal was received: Alcott HR Group, LLC.

A good faith effort was made to publicize the availability of funding, and to solicit proposals in this regard. Documentation regarding the attempt to obtain proposals was forwarded to the Town Attorney in accordance with Guideline 7 of the Town's Procurement Policy. As noted in the attached letter, the Office of the Town Attorney has determined that the procurement is in compliance with the Procurement Policy.

The proposal was reviewed by the Department in compliance with the Town's procurement policy. It was determined to have met all of the requirements of the RFP, and achieved a passing score on the proposal review form. The contract will be for one year, and will include a clause that it may be extended on a year to year basis for a maximum of three additional years dependent on performance and funding availability. Budgeted amounts for subsequent years will be adjusted based on program needs and availability of funds.

The cost of the required Staffing Support/Leasing Services is not to exceed $809,757.66 for the period January 1, 2020 through December 31, 2020. A total of $193,632.79 is available in IGA CD 6293 48080 000 CW19; $193,632.79 is available in IGA CD 6293 48080 000 CW20; $296,492.08 is available in IGA CD 6293 47850 000 CW20; and $126,000.00 is available in CMP A 1315 48080 000 0000.

Therefore, it is respectfully requested that the Town Board adopt a Resolution authorizing the Supervisor and/or his authorized designee, to execute an Agreement with Alcott HR Group, LLC for the provision of Staff Support/Leasing Services for the period of January 1, 2020 through December 31, 2020; and any other documents in connection with the administration of this Agreement.

Frank V. Sammartano
Commissioner

Attachments
cc: Town Attorney, 9 copies

TO: COLIN BELL, DEPUTY COMMISSIONER,
DEPARTMENT OF INTERGOVERNMENTAL AFFAIRS

FROM: OFFICE OF THE TOWN ATTORNEY

DATE: November 1, 2019

SUBJECT: Waiver of Procurement Requirements
Staff Supporting/Leasing Services under the Workforce Innovation and Opportunity Act

---

The Office of the Town Attorney has reviewed your memorandum dated November 4, 2019, together with the information regarding your Department's efforts to obtain the required number of proposals for the Staff Support/Leasing Services under the Workforce Innovation and Opportunity Act.

In accordance with Guideline 7 of the Town's Procurement Policy, this memorandum shall serve as our office's determination that the Department of intergovernmental Affairs has complied with the Procurement Policy.

JOSEPH NOCELLA
TOWN ATTORNEY

Dennis P. Sheehan
Deputy Town Attorney

APPENDIX I

CONTRACT BUDGET – EMPLOYMENT AND TRAINING
THE ALCOTT GROUP

Program Period: January 1, 2020 through December 31, 2020

Slot	Salary
1. Accountant	$100,604.49
2. Clerk	$ 59,013.06
3. Clerk	$ 40,000.00
4. Clerk	$ 40,000.00
5. Clerk	$ 49,505.13
6. Planner	$ 7,500.00
7. Counselor	$ 59,432.47
8. Counselor	$ 64,354.99
9. Counselor	$ 43,028.88
10. Counselor	$ 52,456.48
11. Counselor Part-time	$ 30,000.00
12. Clerk Part-time	$ 19,032.78

Total Salaries	$ 564,928.28
Employee Insurance Cost Reimbursements	$ 6,000.00
Fringe Benefits	$ 219,073.30
Travel and Mileage Expense	$ 2,184.00
Subtotal	$ 792,185.58
The Alcott Group Administrative Service Fee	$ 17,422.08
New Employee Set up Fee	$ 150.00
TOTAL CONTRACT COST	$ 809,757.66

Reviewed By
Office of Town Attorney

WHEREAS, the Town Board, by Resolution No. 880-2017, adopted on December 12, 2017, authorized the Department of Intergovernmental Affairs to renew Worker's Compensation Insurance with the State Insurance Fund, through Salerno Brokerage Corp., for the period January 1, 2018 through December 31, 2018, for the youth enrolled in the Summer Youth and Training Program, conducted by the Department of Intergovernmental Affairs, Division of Employment and Training; and

WHEREAS, Frank V. Sammartano, Commissioner, Department of Intergovernmental Affairs, by memoranda dated November 4, 2019 and November 7, 2019, requested that the Town Board authorize an additional payment in the amount of $823.81 to the State Insurance Fund, through Salerno Brokerage Corp., for Worker's Compensation Insurance for the period of January 1, 2017 through January 1, 2018, pursuant to an audit by the New York State Insurance Fund that concluded that the additional premium cost was justified based on payroll adjustments made during said period,

NOW, THEREFORE, BE IT RESOLVED, That the request as hereinabove set forth is hereby accepted and approved, and the Comptroller is hereby authorized and directed to make an additional payment in the amount of $823.81 to the State Insurance Fund, through Salerno Brokerage Corp., in connection with Worker's Compensation Insurance for the Department of Intergovernmental Affairs Summer Youth and Training Program, with the funds for said payment to be drawn from Account No. IGA CD 6293 43000 000 CW19.

-#-

The foregoing resolution was declared adopted after a poll of the members of the Board; the vote being recorded as follows:

Supervisor Saladino	Aye
Councilman Muscarella	Aye
Councilman Macagnone	Aye
Councilwoman Johnson	Aye
Councilman Imbroto	Aye
Councilman Hand	Aye
Councilman Labriola	Aye

14

TOWN OF OYSTER BAY

INTER-DEPARTMENTAL MEMO

TO: MEMORANDUM DOCKET

FROM: FRANK V. SAMMARTANO, COMMISSIONER
INTERGOVERNMENTAL AFFAIRS

DATE: NOVEMBER 4, 2019

SUBJECT: SUMMER YOUTH EMPLOYMENT AND TRAINING PROGRAM
WORKERS COMPENSATION INSURANCE RECONCILIATION

In connection with the above referenced matter, kindly reserve a space on the Town Board Action Calendar for the meeting of November 19, 2019. Details will follow by supplemental memorandum.

Frank V. Sammartano
Commissioner

cc: Town Attorney w/9 copies

9

TOWN OF OYSTER BAY

INTER-DEPARTMENTAL MEMO

TO: MEMORANDUM DOCKET

FROM: FRANK V. SAMMARTANO, COMMISSIONER
INTERGOVERNMENTAL AFFAIRS

DATE: NOVEMBER 7, 2019

SUBJECT: SUPPLEMENTAL MEMORANDUM TO MD 11/5/19; ITEM 16
SUMMER YOUTH EMPLOYMENT AND TRAINING PROGRAM
WORKERS COMPENSATION INSURANCE RECONCILIATION

The Department of Intergovernmental Affairs, Division of Employment and Training is required to retain Workers Compensation Insurance for the youth that are enrolled in the Division's Summer Youth Employment and Training Program (SYEP). Town Board Resolution No.880-2017, adopted December 12, 2017, authorized the Department of Intergovernmental Affairs to renew Workers Compensation Insurance with Salerno Brokerage Corporation for the period January 1, 2018 through December 31, 2018, in the amount of $7,034.85, including the brokerage service fee.

During the course of the 2018 SYEP Program Year, an audit of the 2017 SYEP Program Workers Compensation usage was conducted by the New York State Insurance Fund and it was determined that the projected 2018 SYEP Workers Compensation needs required an additional premium of $823.81. Town Board Resolution No.566-2018, dated September 18, 2018, authorized the Department of Intergovernmental Affairs to make an additional premium payment of $ 823.81 for Workers Compensation Insurance with Salerno Brokerage Corporation for the period January 1, 2018 through December 31, 2018, making the total premium paid $7,858.66.

Subsequent to the completion of the 2018 SYEP Program Year, a final reconciliation audit was conducted by the New York State Insurance Fund. Through this reconciliation it has been determined that the final balance due for the period January 1, 2018 through December 31, 2018 is $2,035.35; making the total 2018 SYEP Program Workers Compensation Insurance cost $9,894.01

It is therefore respectfully requested that the Town Board authorize payment to Salerno Brokerage Corporation in the amount of $2,035.35 to satisfy the final outstanding Workers Compensation Insurance balance for the 2018 Summer Youth Employment and Training Program. Funds are available in account IGA CD 6293 43000 000 CW19. All 2018 Summer Youth Employment and Training Program Worker's Compensation Insurance needs are funded through the Workforce Innovation and Opportunity and are therefore at no expense to the Town of Oyster Bay.

Frank V. Sammartano
Commissioner

cc: Town Attorney w/ 9 copies
Enclosure(s)

Meeting of September 18, 2018 Resolution No. 566-2018

WHEREAS, by Resolution No. 880-2017, adopted on December 12, 2017, the Town Board authorized the Department of Intergovernmental Affairs to renew Workers Compensation Insurance with Salerno Brokerage Corp., for the period January 1, 2018 through December 31, 2018; and

WHEREAS, Frank V. Sammartano, Commissioner, Department of Intergovernmental Affairs, by memorandum dated August 22, 2018, requested Town Board authorization for payment of a balance due, after an audit conducted by the New York State Insurance Fund, in the amount of $823.81 for Workers Compensation Insurance for the youth enrolled in the Division's Youth Employment and Training Program,

NOW, THEREFORE, BE IT RESOLVED, That the request as hereinabove set forth is accepted and approved, and payment of $823.81 to Salerno Brokerage Corp., for additional premium, as audited, for Workers Compensation Insurance for the youth enrolled in the Division's Youth Employment and Training Program for January 1, 2018 through December 31, 2018, is authorized and be it further

RESOLVED, That the Comptroller is hereby authorized and directed to make payment to Salerno Brokerage Corp., for same in the total amount of $823.81, upon presentation of a duly certified claim, after audit, and that the funds for said payment shall be drawn from Account No. IGA CD 6293 43000 000 CW17.

#

Reviewed By
Office of Town Attorney

The foregoing resolution was declared adopted after a poll of the members of the Board; the vote being recorded as follows:

Supervisor Saladino	Aye
Councilman Muscarella	Aye
Councilman Macagnone	Aye
Councilwoman Alesia	Aye
Councilwoman Johnson	Aye
Councilman Imbroto	Aye
Councilman Hand	Aye

cc: Supervisor
Town Attorney
Comptroller
Intergovernmental Affairs

Meeting of December 12, 2017

Resolution No. 880-2017

WHEREAS, Frank V. Sammartano, Commissioner, Department of Intergovernmental Affairs, by memorandum dated December 4, 2017, requested Town Board authorization to retain Workers Compensation Insurance for the youth enrolled in the Division's Youth Employment and Training Program, with Salerno Brokerage Corp., 117 Oak Drive, Syosset, New York 11791, in the amount of $6,284.85, with a brokerage service fee of $750.00, for January 1, 2018 through December 31, 2018,

Reviewed By
Office of Town Attorney

NOW, THEREFORE, BE IT RESOLVED, That the request as hereinabove set forth is accepted and approved, and Frank V. Sammartano, Commissioner of the Department of Intergovernmental Affairs, is hereby authorized to renew Workers Compensation Insurance for the youth enrolled in the Division's Youth Employment and Training Program with Salerno Brokerage Corp., in the amount of $6,284.85, with a brokerage service fee of $750.00, for January 1, 2018 through December 31, 2018, and be it further

RESOLVED, That the Comptroller is hereby authorized and directed to make payment for same in the total amount of $7,034.85, upon presentation of a duly certified claim, after audit, and that the funds for said payment shall be drawn from Account No. IGA CD 6293 43000 000 CW17.

#

The foregoing resolution was declared adopted after a poll of the members of the Board; the vote being recorded as follows:

Supervisor Saladino	Aye
Councilman Muscarella	Aye
Councilman Macagnone	Aye
Councilwoman Alesia	Absent
Councilwoman Johnson	Aye
Councilman Imbroto	Absent
Councilman Hand	Aye

cc: Supervisor (2)
Town Attorney
Comptroller
Intergovernmental Affairs

SALERNO BROKERAGE CORP.
117 Oak Drive
Syosset, NY 11791

Oyster Bay-North Hempstead-Glen Cove
Workforce Development Board
977 Hicksville Road
Massapequa, NY 11755

PLEASE REMIT TO:

SALERNO BROKERAGE CORP.

117 OAK DRIVE
SYOSSET, NY 11791 – 4625
(516) 364-4044

INVOICE NO
NYSIF57059146
PRODUCER NO
Salerno Brokerage
CUSTOMER NO
00009556

EFFECTIVE DATE	POLICY NO.	DESCRIPTION	AMOUNT	EXPIRATION DATE
1/1/2018	H2148337-5	NYSIF AUDIT 18-19	$2,035.35	1/1/2019

Pls pay now	00009556
DUE DATE	CUSTOMER NO

$2,035.35
TOTAL AMOUNT DUE

Reviewed By
Office of Town Attorney

WHEREAS, 300 DUFFY REAL ESTATE, LLC, fee owner, has submitted an application to the Department of Planning and Development for Site Plan Approval to amend a Site Plan previously approved by Resolution No. 624-2016, adopted on November 15, 2016, in order to construct a proposed 19,780 square foot one-story warehouse addition to an existing building addition to an existing building, on premises located in a Light Industrial (LI) District, at 300 Duffy Avenue, Hicksville, Town of Oyster Bay, County of Nassau, State of New York, and described as Section 11, Block 327, Lots 406, 408, 412, 422 and 424 on the Land and Tax Map of Nassau County; and

WHEREAS, Elizabeth L. Maccarone, Commissioner, Department of Planning and Development, by memoranda dated November 4, 2019 and November 7, 2019, advised that the Department of Planning and Development has reviewed the following eleven (11) plans prepared by David N. Bilow, P.E.:

SHEET NO.	TITLE	PREPARED BY	DATE
A-001	Title Sheet	David N. Bilow, P.E.	10/28/19
SE-100	Soil Erosion & Sediment Control Plan	David N. Bilow, P.E.	10/28/19
SE-101	Soil Erosion Details	David N. Bilow, P.E.	10/28/19
SP-100	Site Plan	David N. Bilow, P.E.	10/28/19
SP-101	Site Details	David N. Bilow, P.E.	10/28/19
SP-102LA	Site Landscape Plan	David N. Bilow, P.E.	10/28/19
SP-102LT	Site Lighting Plan	David N. Bilow, P.E.	10/28/19
SP-103	Site Grading & Drainage Plan	David N. Bilow, P.E.	10/28/19
SP-104	Site Signage & Markings Plan	David N. Bilow, P.E.	10/28/19
A-100	Ground Floor Plans	David N. Bilow, P.E.	10/28/19
A-200	Building Elevations	David N. Bilow, P.E.	10/28/19

WHEREAS, said Commissioner further reported that the plans submitted, comply with the standards set forth in the Code of the Town of Oyster Bay, Section 246.6, Site Plan Review; and

WHEREAS, the Town of Oyster Bay Department of Environmental Resources, Town Environmental Quality Review Division, has reviewed and submitted its "Review of Action and Determination of Significance," regarding the environmental impacts contemplated by said Petitions; and

WHEREAS, the "Review of Action and Determination of Significance" was duly made in the Town Environmental Quality Review Division's report dated November 6, 2019, with said report rendering the Division's assessment of the relevant environmental factors affected by the uses proposed in the subject Petition and recommending that the conclusions contained therein be accepted, and that same be deemed to constitute a Negative Declaration, indicating that the

proposed actions would not cause significant impacts upon the environment and recommended, accordingly, that the Town Board issue a Negative Declaration; and

NOW, THEREFORE, BE IT RESOLVED, That in accordance with the memoranda of Elizabeth L. Maccarone, Commissioner, Department of Planning and Development, dated November 4, 2019 and November 7, 2019, the eleven (11) plans prepared by David N. Bilow, P.E., are hereby approved; and be it further

RESOLVED, That the Town Board of the Town of Oyster Bay does hereby adopt a Negative Declaration with respect to the Petition of 300 DUFFY REAL ESTATE, LLC, fee owner, to amend a Site Plan previously approved by Resolution No. 624-2016, adopted on November 15, 2016, in order to construct a proposed 19,780 square foot one-story warehouse addition to an existing building addition to an existing building, on premises located in a Light Industrial (LI) District, at 300 Duffy Avenue, Hicksville, Town of Oyster Bay, County of Nassau, State of New York, and described as Section 11, Block 327, Lots 406, 408, 412, 422 and 424; and be it further

RESOLVED, That the application of 300 DUFFY REAL ESTATE, LLC, fee owner, has submitted an application to the Department of Planning and Development for Site Plan Approval to amend a Site Plan previously approved by Resolution No. 624-2016, adopted on November 15, 2016, in order to construct a proposed 19,780 square foot one-story warehouse addition to an existing building addition to an existing building, on premises located in a Light Industrial (LI) District, at 300 Duffy Avenue, Hicksville, Town of Oyster Bay, County of Nassau, State of New York, and described as Section 11, Block 327, Lots 406, 408, 412, 422 and 424, is hereby APPROVED.

#

The foregoing resolution was declared adopted after a poll of the members of the Board; the vote being recorded as follows:

Supervisor Saladino	Aye
Councilman Muscarella	Aye
Councilman Macagnone	Aye
Councilwoman Johnson	Aye
Councilman Imbroto	Aye
Councilman Hand	Aye
Councilman Labriola	Aye

18

Town of Oyster Bay

Inter-Departmental Memo

TO: **MEMORANDUM DOCKET**

FROM: **ELIZABETH L. MACCARONE, COMMISSIONER**
DEPARTMENT OF PLANNING & DEVELOPMENT

DATE: **NOVEMBER 4, 2019**

SUBJECT: **SITE PLAN REVIEW AND APPROVAL**
NASSAU CANDY
300 DUFFY AVE.
HICKSVILLE, N.Y. 11801
SEC. 11 BLK. 327 LOT 406, 408, 412 + 422
ZONE: LIGHT INDUSTRY
SITE PLAN APPLICATION NUMBER: SP 21-18

Additional information will be provided in a Supplemental Docket Memorandum in connection with the above referenced matter. I therefore request that a space be reserved at the next available docket for this additional information.

Elizabeth L. Maccarone
ELIZABETH L. MACCARONE
COMMISSIONER

ELZ/jsv

cc: Legislative Affairs (9 copies)

116

Town of Oyster Bay

Inter-Departmental Memo

TO: MEMORANDUM DOCKET

FROM: ELIZABETH L. MACCARONE, COMMISSIONER
DEPARTMENT OF PLANNING & DEVELOPMENT

DATE: NOVEMBER 7, 2019

SUBJECT: SUPPLEMENTAL MEMO TO DOCKET ITEM NO. 18
DOCKET OF NOVEMBER 5, 2019
SITE PLAN REVIEW AND APPROVAL
NASSAU CANDY
300 DUFFY AVENUE
HICKSVILLE, N.Y. 11801
SEC. 11 BLK. 327 LOT 406, 408, 412, 422 + 424
ZONE: LI
SITE PLAN APPLICATION NUMBER: SP 21-18

This Department has reviewed the proposed Site Plan Application for the above-captioned project with regard to section, block and lot designation, zoning classification, existing variances, zoning violations and required off-street parking. The Department's review is made pursuant to Chapter 246 of the Code of the Town of Oyster Bay.

Previously, this site was granted a Special Use Permit through Town Board Resolution Number 690-1997, dated October 7, 1997, for the construction and development of an industrial building in two (2) phases. This site received another Town Board approval to amend the Site Plan through Town Board Resolution Number 624-2016, dated November 15, 2016, in order to construct a 7,210 square foot addition to the building. The current applicant is seeking Town Board approval without the need for a Public Hearing, for the enclosed Site Plan in order to construct a proposed 19,780 square foot one-story warehouse addition to an existing 290 foot x 349 foot building.

This Department has reviewed the following eleven (11) drawings prepared by David N. Bilow, P.E., are identified as follows

SHEET NO.	TITLE:	PREPARED BY:	LAST REVISED DATE:
A-001	Title Sheet	David N. Bilow, P.E.	10/28/2019
SE-100	Soil Erosion & Sediment Control Plan	David N. Bilow, P.E.	10/28/2019
SE-101	Soil Erosion Details	David N. Bilow, P.E.	10/28/2019
SP-100	Site Plan	David N. Bilow, P.E.	10/28/2019
SP-101	Site Details	David N. Bilow, P.E.	10/28/2019
SP-102LA	Site Landscape Plan	David N. Bilow, P.E .	10/28/2019
SP-102LT	Site Lighting Plan	David N. Bilow, P.E.	10/28/2019
SP-103	Site Grading & Drainage Plan	David N. Bilow, P.E.	10/28/2019
SP104	Site Signage and Markings Plan	David N. Bilow, P.E.	10/28/2019
A-100	Ground Floor Plans	David N. Bilow, P.E.	10/28/2019
A-200	Building Elevations	David N. Bilow, P.E.	10/28/2019

Also submitted for your review are the following documents:

1. Town Board Resolution Number 624-2016 dated November 16, 2016
2. Memorandum from George Baptista, Deputy Commissioner, Department of Environmental Resources, dated November 6, 2019.

Said plans were prepared and modified using the standards set forth in Chapter 246, Section 6 (Site Plan Review) of the Code of the Town of Oyster Bay as a guide. Development of the subject premises in accordance with the plans attached does comply with the requirements of Chapter 246, Section 6 (Site Plan Review) of the Code of the Town of Oyster Bay and therefore, I recommend Site Plan Approval by the Town Board.

Elizabeth L. Maccarone
ELIZABETH L. MACCARONE
COMMISSIONER
BY Timothy R. Zike
DEPUTY COMMISSIONER

ELM:jv
Encls.

cc: Legislative Affairs (9 copies w/ attachments)

Town of Oyster Bay

Inter-Departmental Memo

TO: MEMORANDUM DOCKET

FROM: ELIZABETH L. MACCARONE, COMMISSIONER
DEPARTMENT OF PLANNING & DEVELOPMENT

DATE: NOVEMBER 4, 2019

SUBJECT: SITE PLAN REVIEW AND APPROVAL
NASSAU CANDY
300 DUFFY AVE.
HICKSVILLE, N.Y. 11801
SEC. 11 BLK. 327 LOT 406, 408, 412 + 422
ZONE: LIGHT INDUSTRY
SITE PLAN APPLICATION NUMBER: SP 21-18

Additional information will be provided in a Supplemental Docket Memorandum in connection with the above referenced matter. I therefore request that a space be reserved at the next available docket for this additional information.

Elizabeth L. Maccarone
ELIZABETH L. MACCARONE
COMMISSIONER

ELZ/jsv

cc: Legislative Affairs (9 copies)

Meeting of November 15, 2016 Resolution No. 624-2016

WHEREAS, 300 DUFFY REAL ESTATE, LLC, fee owner, has applied to the Department of Planning and Development of the Town of Oyster Bay, for approval of an amended site plan, to add an additional 7,210 square feet to the building, located at 300 Duffy Avenue, Hicksville, Town of Oyster Bay, New York 11801, said premises being described as Section 11, Block 327, Lots 406, 408, 412, and 422, on the Land and Tax Map of Nassau County; and

WHEREAS, by Resolution No. 690-1997, adopted by the Town Board in October 7, 1997, the Town Board granted the application for site plan approval for the construction and development of an industrial building in two (2) phases located in an "LI" (Light Industrial) District, and at that time, the Resolution incorrectly identified the property as 299 Duffy Avenue, Hicksville, New York, however, the actual address is 300 Duffy Avenue, Hicksville, New York as verified by the property's physical location description and the Nassau County Land and Tax Map; and

Reviewed By Office of Town Attorney

WHEREAS, Timothy R. Zike, Deputy Commissioner of the Department of Planning and Development, by memorandum dated October 27, 2016, advises that the Department of Planning and Development has reviewed the following two (2) plans prepared by Mitchell D. Newman, R.A., Newman Design, Cold Spring Hills, New York:

SHEET NO.	TITLE	DATE
ST-101.00	SITE PLAN, ZONING	09/26/2016
ST-102.00	SITE PLAN DETAILS	08/13/2015

WHEREAS, said Deputy Commissioner further reports that the plans submitted, as modified, comply with the standards set forth in the Code of the Town of Oyster Bay, Section 246.6, Site Plan Review, and recommends Town Board approval for the plans enumerated herein; and

NOW, THEREFORE, BE IT RESOLVED, That in accordance with the memorandum of Timothy R. Zike, Deputy Commissioner of the Department of Planning and Development, dated October 27, 2016, the two (2) plans prepared by Mitchell D. Newman, R.A., Newman Design, Cold Spring Hills, New York, are hereby approved; and be it further

RESOLVED, That the application of 300 DUFFY REAL ESTATE, LLC, fee owner, for approval of an amended site plan, to add an additional 7,210 square feet to the building, located at 300 Duffy Avenue, Hicksville, Town of Oyster Bay, New York 11801, said premises being described as Section 11, Block 327, Lots 406, 408, 412, and 422, on the Land and Tax Map of Nassau County is hereby APPROVED.

-#-

The foregoing resolution was declared adopted after a poll of the members of the Board; the vote being recorded as follows:

Supervisor Venditto	Aye
Councilman Muscarella	Aye
Councilman Macagnone	Aye
Councilman Coschignano	Aye
Councilman Pinto	Aye
Councilwoman Alesia	Aye
Councilwoman Johnson	Aye

cc: Supervisor
Town Attorney
Comptroller (2)
Planning & Development

TOWN OF OYSTER BAY
Inter-Departmental Memo

TO: Elizabeth L. Maccarone, Commissioner of Planning & Development

FROM: George Baptista, Jr., Deputy Commissioner of Environmental Resources

SUBJECT: TEQR Report – 300 Duffy Ave., Hicksville
Nassau Candy Addition

LOCATION: 300 Duffy Avenue
Section 11, Block 327, Lot(s) 406, 408, 412 & 422

DATE: November 6, 2019

Attached hereto is the Town Environmental Quality Review (TEQR) Report prepared by the Department of Environmental Resources (DER) with regard to the above-referenced proposed action, which has been prepared pursuant to the provisions of the New York State Environmental Quality Review Act (Article 8 of the Environmental Conservation Law, SEQRA, as promulgated in the regulations contained in 6 NYCRR Part 617) and the Town of Oyster Bay Environmental Quality Review (TEQR) Law (Chapter 110 of the Code of the Town of Oyster Bay). If accepted by the Town Board, as lead agency, please return a signed copy of Part 3 of the NYS Short EAF to this office for filing which will complete the SEQR process.

Please contact the Department of Environmental Resources if you have any questions.

GEORGE BAPTISTA JR.
Deputy Commissioner

cc: Joseph Nocella, Town Attorney, Office of the Town Attorney
Sheila Tarnowski, Director of Legislative Affairs, Office of Legislative Affairs

File: TEQR/2018 Projects/300 Duffy Ave._Hicksville_GBCover memo_revised_11_6_2019

TOWN OF OYSTER BAY
DEPARTMENT OF ENVIRONMENTAL RESOURCES
TOWN ENVIRONMENTAL QUALITY REVIEW DIVISION

REVIEW OF ACTION AND RECOMMENDED
DETERMINATION OF SIGNIFICANCE
"TEQR REPORT"

November 6, 2019

Pursuant to the provisions of the New York State Environmental Quality Review Act (6 NYCRR, Part 617) and the Town of Oyster Bay Environmental Quality Review Law (Chapter 110 of the Code of the Town of Oyster Bay), the Town Environmental Quality Review Division has reviewed the following action:

Applicant: 300 Duffy Real Estate, LLC.

Title of Project: Nassau Candy Building Addition

Location of Proposed Action: The proposed action is located at 300 Duffy Avenue in the Hamlet of Hicksville and is further identified as: Section 11, Block 327, Lot(s) 406, 408, 412 & 422 on the Land and Tax Map of Nassau County.

Description of Proposed Project: The proposed action consists of an approximate 20,000 sq. ft. addition to an existing 150,000 sq. ft warehouse building. The purported purpose of the additional warehouse area is to add storage space to the current facility in order to warehouse items that the applicant currently procures, produces, and stores as the applicant has maximized the available space in their current facility. The proposed action also includes ancillary site work including improvement to the drainage system, new pavement, site lighting and landscaping.

Potential Approvals Required:

- Town of Oyster Bay
  - Town Board Approval
  - Department of Planning and Development – Site Plan Approval
  - Department of Public Works – MS4 SWPPP Acceptance
- NYSDEC – SPDES General Permit for Stormwater Discharges for Construction Activities (GP-0-15-002)
- Nassau County Industrial Development Agency - IDA funding

Type of Review: Uncoordinated

Lead Agency: Not applicable

SEQRA Classification: Unlisted

Contact Person: Julia Schneider, Director of TEQR
Town of Oyster Bay
Department of Environmental Resources
29 Spring Street
Oyster Bay, New York 11771
Telephone: (516) 677-5811
Email: Jschneider@oysterbay-ny.gov

Documents Reviewed:

- *A-001. Title Sheet.* 300 Duffy Avenue, Hicksville, NY 11803 Prepared by: Bilow Garret Group, Architects and Planners, P.C. (NJ). Date: 8/23/2019.
- *A-100. Floor Plans.* 300 Duffy Avenue, Hicksville, NY 11803 Prepared by: Bilow Garret Group, Architects and Planners, P.C. (NJ). Date: 4/18/2019.
- *A-200. Building Elevations.* 300 Duffy Avenue, Hicksville, NY 11803 Prepared by: Bilow Garret Group, Architects and Planners, P.C. (NJ). Date: 4/18/2019.
- *SE-100. Soil Erosion and Sediment Control Plan.* 300 Duffy Avenue, Hicksville, NY 11803 Prepared by: Bilow Garret Group, Architects and Planners, P.C. (NJ). Date: 6/28/2019.
- *SE-101. Soil Erosion Details. Title Sheet.* 300 Duffy Avenue, Hicksville, NY 11803 Prepared by: Bilow Garret Group, Architects and Planners, P.C. (NJ). Date: 6/28/2019.
- *SP-100 Site Plan.* 300 Duffy Avenue, Hicksville, NY 11803 Prepared by: Bilow Garret Group, Architects and Planners, P.C. (NJ). Date: 10/3/2018 Revision: 6/28/2019.
- *SP-101. Site Details.* 300 Duffy Avenue, Hicksville, NY 11803 Prepared by: Bilow Garret Group, Architects and Planners, P.C. (NJ). Date: 4/23/2019.
- *SP-102LA. Site Landscape Plan.* 300 Duffy Avenue, Hicksville, NY 11803 Prepared by: Bilow Garret Group, Architects and Planners, P.C. (NJ). Date: 8/23/2019.
- *SP-102LT. Site Lighting Plan.* 300 Duffy Avenue, Hicksville, NY 11803 Prepared by: Bilow Garret Group, Architects and Planners, P.C. (NJ). Date: 4/23/2019.
- *SP-103. Grading and Drainage Plan.* 300 Duffy Avenue, Hicksville, NY 11803 Prepared by: Bilow Garret Group, Architects and Planners, P.C. (NJ). Date: 6/28/2019.
- *SP-104. Signage and Markings Plan.* 300 Duffy Avenue, Hicksville, NY 11803 Prepared by: Bilow Garret Group, Architects and Planners, P.C. (NJ). Date: 4/23/2019.
- *NYS Short Environmental Assessment Form,* with attachments, revision date November 6, 2019;
- *Town of Oyster Bay Short Environmental Assessment Form Addendum,* with attachments revision date October 2, 2019.

Additionally, a series of comments and response to comment letters, emails, telephone conversations regarding additional information and clarification of details occurred in order to for DER perform the requisite comprehensive environmental review of the proposed action pursuant to SEQRA. Additionally, DER conducted a site inspection on August 1, 2019 to observe the existing conditions which were considered and incorporated into comments as part of our review process.

Recommended Determination of Significance: **NEGATIVE DECLARATION** (indicating that the proposed action will not result in significant adverse environmental impacts). The TEQR Division recommends that the Town Board accepts the above determination, based on the TEQR Division's review of the following environmental parameters relative to the subject application and follow-up emails and discussions that provided additional information to the satisfaction of DER in arriving at the aforementioned recommendation. Please note the information contained herein has been prepared to succinctly summarize the extensive and thorough environmental review conducted for the subject action; information in attachments and correspondence have been incorporated into this TEQR Report where feasible, additional detailed information substantiating the parameters discussed herein can be obtained upon request from the Department of Environmental Resources.

Land Use and Zoning

The subject property is located in the Hamlet of Hicksville situated entirely within the Light Industrial (LI) zone in the Town of Oyster Bay. The building is currently used as a warehouse/office building/ shipping center for Nassau Candy. There is landscaped grass areas surrounding the parking lot and the south east portion of the property. Parking is available on the northeast side of the property for employees and loading bays are located south of the existing building for the warehouse/shipping portion of the business.

The existing warehouse at the subject property is currently+/- 150,000 sq. ft. The applicant is proposing a +/- 20,000 sq. ft. addition which amounts to a 13% increase in total warehousing area. The additional warehouse area is needed to add storage space to the current facility in order to warehouse items that the applicant currently procures, produces, and stores as the applicant has maximized the available space in their current facility. There is no change of use or functional operation of the subject site as part of the proposed action.

Existing Conditions:

The site is bound to the north by LIRR tracks, to the west and east by commercial uses in the LI zone and directly south of the site are office/warehouses uses also in the LI Zone. Residential properties are located approximately 500 feet southeast of the site across Duffy Avenue in the R1-6 zone.The site and surrounding area is comprised of uses that have been and are currently commercial/industrial in nature. The residential uses on the site are separated from the proposed action by Duffy Avenue. It should also be noted that due to the site elevations and additional landscaping, the residential properties are not anticipated to be adversely impacted by the proposed action. The proposed use does not require a use variance or special permit, and is generally consistent with community character. Based on the aforementioned it is not anticipated that the proposed project will pose a significant adverse environmental impact as it pertains to land use and zoning pursuant to SEQR.


N40°45'46.08"
300 Duffy Ave W 73°32'39.84"
Google Earth

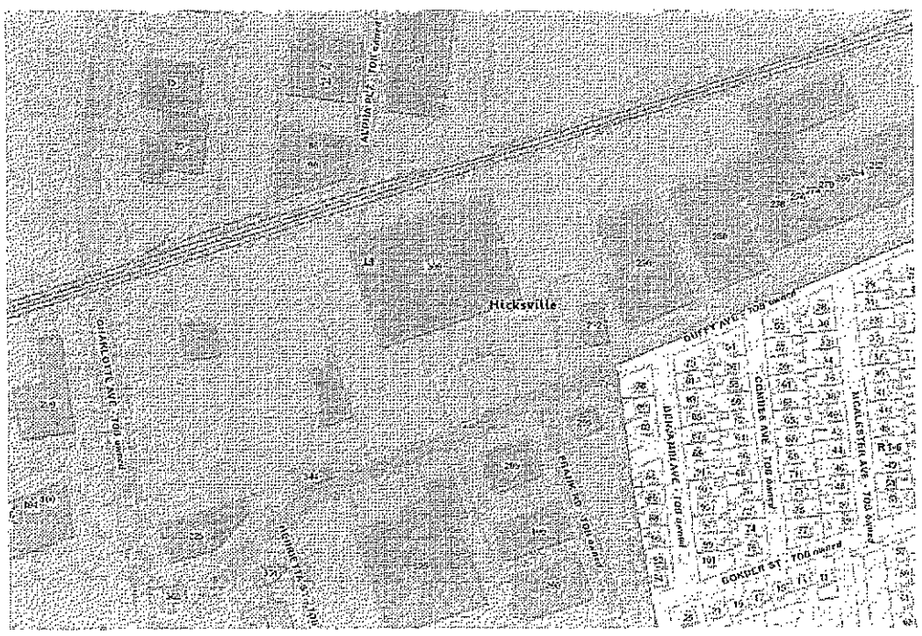
Hicksville
DUFFY AVE - 700 owned
GORDON ST - 700 owned

Traffic, Transportation, and Pedestrian Opportunities

On January 1, 2019, the SEQR regulations and guidance documents were updated which included additional questions to fully evaluate potential transportation-related impacts. The applicant submitted an initial traffic analysis which was inadequate as it pertains to the current applicable considerations as it pertains to transportation impacts. DER prepared a transportation impact information request addendum in April 2019 that consolidates the transportation related issues from the revised SEQR Handbook, EAF Workbooks, SEQR Cookbook, Town of Oyster Bay EAF Addendum, and concerns that are frequently expressed by residents and the Town. The document provides a comprehensive consolidated information repository which minimizes the potential for multiple rounds of comments and standardizes and streamlines the process. The applicant revised and resubmitted additional information with the EAF, to addresses the concerns of DER. Key sections are summarized below..

The proposed action consists of an approximate 20,000 sq. ft. addition to an existing 150,000 sq. ft warehouse building. The purported purpose of the additional warehouse area is to add storage space to the current facility in order to warehouse items that the applicant currently procures, produces, and stores as the applicant has maximized the available space in their current facility. The applicant indicated that the existing facility does not have "peak traffic hours" as the operation of the facility is spread over a 20-hour period. Existing shift start times stagger from 6:00 am to 4:00 pm. The applicant has 30 in house trucks that have staggered departure times between the hours of 4:00am- 8:00am Monday through Friday. Based on receiving logs the facility receives on average 20-25 deliveries per day evenly spread across their receiving hours of 8:00 am - 5:00 pm. There is no plan to increase the frequencies of deliveries or add additional trucks, rather the applicant plans to increase the size of existing deliveries. As a result, the proposed addition will not substantially increase traffic on-site.

Short Term Traffic Impacts-Construction Related Traffic:
During the construction period, construction trucks would access/egress the project site via the existing driveways. While on-site construction activity will fluctuate on a weekly basis, depending largely on the number of workers and construction trucks needed for the activities during each time period, an estimate based on general industry standards and experience was provided to DER.

Regarding short-term impacts, specifically the anticipated construction truck traffic, this will be spread between a typical 7 am to 3:30 pm workdays, Monday thru Friday. The truck traffic will take place during the following items of work:

1. Site work / Earthwork shall have a duration of+/- 45 days and on average of 4 trips per day.
2. Structural Steel shall have a duration of+/- 20 days and an average of 2 trips per day.
3. Concrete Work shall have a duration of+/- 30 days and an average of 2 trips per day.
4. Precast Walls shall have a duration of+/- 10 days and an average of 2 trips per day.
5. Landscaping shall have a duration of+/- 5 days and an average of 2 trips per day.
6. Asphalt Paving shall have a duration of+/- 4 days and an average of 3 trips per day.

Based on the minimal about of truck traffic activity anticipated based on the information provided above, the construction of the project is not anticipated to cause significant traffic impacts within the study area. In addition, construction workers will park on-site.

Build-Out Conditions
Pursuant to information provided on the TOB EAF Addendum, the building is operational approximately 20 hours per day/five days of the week. Deliveries to the building typically occur between 8AM to 5PM. The site is not located directly adjacent to any residences and is an established existing use in the community.

Parking
Sufficient substantiation was provided that that the proposed project will not have any adverse direct or secondary environmental impacts pursuant to SEQR. Further, based on our site inspection there appeared to be ample parking available on site. The proposed provided parking meets the requirements of Town Code, as such it is not anticipated that there will be an adverse impact to parking and or secondary impacts as it relates to this resource. A one-page chart is provided at an attachment to this report.

Public Transportation, Pedestrian Opportunities and Bicycle Routes
The proposed project will not place any new or different demands on public transportation nor will the project result in added demand for bike or pedestrian infrastructure "other" transportation related impacts pursuant to SEQR. Further, the applicant incorporated bicycle racks to encourage employee use of same in light of environmentally sustainable initiatives standard of DER review of redevelopment applications.

Based on the aforementioned, DER has determination that the proposed project it is not anticipated to have a significant adverse environmental impact on traffic, transportation or pedestrian needs as it pertains to the current applicable environmental standards for evaluating same.

Impacts on Energy
The Proposed Project includes a minor increase in energy demand, but is not anticipated to impose a significant adverse environmental impact associated with demands on existing local energy resources. DER has been actively encouraging applicants to consider energy conservation and green infrastructure measures to reduce the overall carbon footprint of proposed redevelopment activities. While DER is unable to mandate specific measures, this Department does require that applicants meaningfully consider potential best management practices to reduce greenhouse gas emissions, heat island effects of increased impervious surfaces and investigate the feasibility of incorporating climate smart community principles where feasible. Specifically, in comments on this application, DER requested additional information pertaining to any specific environmentally sustainable measures as part of the proposed project to demonstrate the applicant's commitment to minimizing their carbon footprint and mitigating environmental impacts to the maximum extent practicable.

"For example, green roofs, reflective roof paint to reduce the potential heat island effect/impacts of the proposed building and associated additional impervious surfaces, bioswales, self-watering planters, pervious pavers, permeable asphalt, solar panels, alternative fuel, electric charging stations, compressed natural gas, etc ... should be discussed as applicable to demonstrate how the applicant considered incorporating environmentally sustainable principles into the final design in order to offset the potential, "heat island" effects of the increase in impervious surface area." Further, DER also noted in comments to the application that, "Pursuant to the NYSDEC EAF Workbook, The Energy Code requires minimum standards for energy-efficiency in commercial and residential buildings to reduce fuel needs, lower operating costs, reduce dependence on imported energy sources, and reduce emissions and pollutants.

Exceeding the requirements of the State Energy Code or including renewable energy into the project design could make your proposed project more environmentally compatible, reduce greenhouse gases, and be more consistent with the municipality's environmental goals."

The following items been incorporated into the building design:

- The exterior building walls for the addition will be constructed using precast wall panels comprised of recycled content and integral insulation for increased energy efficiency.
- LED Lighting and high-efficiency mechanical units will be employed to reduce electrical and energy use.
- The existing facility presently compacts and recycles all cardboard and plastic. These practices will be extended to include the proposed addition. The construction manager will document any further sustainable waste management practices during construction.
- Reflective roofing will be installed atop of the proposed building to reduce heat absorption and to conserve energy.
- Bicycle racks were incorporated into the design to encourage reliance on personal use vehicles
- A significant amount of vegetation was incorporated into the design as a best management practice that adhere to the Town's environmental sustainability objectives.

It should also be noted that the Department of Environmental Resources requested that the applicant consider incorporating additional green infrastructure measures. While DER cannot mandate implementation of specific practices, it is required that the owner/operator incorporate green infrastructure measures into the planning design component of the Stormwater Pollution Prevention Plan pursuant to the requirements of the SPDES General Permit for Stormwater Discharges from Construction Activities (GP-0-15-002) and Chapter 204, "Stormwater Management and Erosion and Sediment Control" requirements in Oyster Bay Town Code (additional information on this is contained in the pertinent section of this TEQR Report, below). Through a series of meetings, emails and telephone calls, the applicant did agree to incorporate a "cool roof" (in the form of utilizing reflective roof paint), among the other measures discussed above; DER believes that the applicant adhered to incorporating green infrastructure measures pursuant to the SPDES General Permit and in accordance with Town Code and SEQR guidance documents (updated and effective January 1, 2019) pertaining to environmental sustainability. Given this information, there are no anticipated significant adverse impacts as a result of the proposed project to energy resources.

Impacts on Flooding, Erosion, and Drainage

The proposed project is not located in a FEMA floodplain area, and as the site has been previously developed it does not contain soils that would be prohibitive for effective stormwater management or future site redevelopment. The subject property does not contain species of special ecological concern or provide essential habitat to support protected wildlife species or plant life. Additional drainage structures will be installed to improve groundwater recharge and reduce the potential for flooding and adverse impacts from stormwater runoff.

Significant additional landscaping was incorporated into the plan during the course of project modifications as a result of comments on preliminary plans prior to the final plan submittal which is the subject of this TEQR report. Further, the proposed development is subject to review by the Town of Oyster Bay Department of Public Works as the site will disturb greater than an acre of soil and therefore

requires a SPDES General Permit for Stormwater Discharges from Construction Activities and a Stormwater Pollution Prevention Plan must be prepared.

While DER does not require an approved SWPPP during the course of environmental review (in accordance with the *SEQR Handbook*, 4th Edition, January 2019), a reasonable amount of information to ensure that there will be no significant adverse environmental impacts as it pertains to various stormwater management and sediment and erosion control measures, as well as secondary impacts of same are within the purview of this Department. To that end, specific plan components were carefully reviewed, and amendments were addressed to the satisfaction of DER based on the final site plans and clarification of components in the final application submittal to DER. The site owner is responsible for compliance with the SWPPP, ensuring that all erosion and sediment control practices and all post-construction stormwater management practices identified in the SWPPP are maintained in effective operating condition at all times. Pursuant to GP-0-15-002 and Town Code §204-10 requirements, inspections of construction activity and erosion controls/stormwater management practices are required to be conducted by a qualified inspector in accordance with a schedule specified in the permit. The site operator is obligated to maintain the record of all inspection reports on the site and address necessary corrective actions identified by the qualified inspector. Implementation of erosion and sedimentation control measures, as described in the two manuals noted above, and as specified in the SWPPP, would assist in ensuring that the proposed development would minimize impact to groundwater and surface water resources, and adjacent roadways and properties.

As long as all applicable laws governing these issues are adhered to, under the review and final approval by the appropriate governing regulatory agencies, the proposed project uses will not result in any additional significant adverse environmental impacts to pertaining to on-site erosion and sediment control and overall effective stormwater management.

Topography and Soils

The subject property is currently developed; which there are significant changes in topography and some steeps slopes onsite, the proposed areas of disturbance are concentrated in area of fairly level topography. Given the conditions and implementation of the SWPPP prior to soil disturbance and throughout construction activity until the site has been sufficiently stabilizing in accordance with all applicable regulations, these conditions minimize the potential for the proposed action to cause erosion and off-site transport of soil.

The Subject Property has been graded for commercial usage. No bedrock outcroppings were observed at the Subject Property. Near-surface geology in heavily developed areas such as the Subject Property and vicinity is considered "urban land" and is characterized by a non-homogeneous distribution of soil and fill types. Excavation and backfilling for building foundations, utility conduits, subway systems and other construction results in a varied subsurface profile. In this setting, estimation of local subsurface parameters such as permeability, moisture content, and organic fraction is not feasible without site-specific testing data.

The on-site soils are classified in the *Nassau County Soil Survey* as Urban Land (Ug). According to the *Soil Survey of Nassau County, New York*, the subject property consists of soils comprised entirely of Ug (Urban Land) – that have been artificially altered by prior development. These soils generally do not have characteristics that place significant limitations on development activities. The soils on the project site are

not highly susceptible to erosion, due primarily to the lack of significant topographic relief. Based on these factors, it is not anticipated that the proposed action will result in significant impacts with respect to topography and soils. See discussion regarding groundwater impacts as it pertains specifically to potential hazardous materials impacting soils; this above section pertains to physical properties of the soil.

Flora and Fauna

The subject property is located within an established industrial zone in the Town of Oyster Bay. Existing vegetation does not contain flora of ecological significance, nor does the existing ecological community consist of an environment that would support establishment of sensitive flora or fauna. The proposed redevelopment will include a significant amount of landscaping and the ultimate proposal includes sufficient biological diversity to the satisfaction of DER. It should be noted that DER requested a significant improvement to the initial proposed landscaping plan in accordance with prevailing NYS guidance documents and the applicant made substantial improvements to the satisfaction of DER to meet the Department's requests regarding same. The resulting plan is a vast improvement and enhanced landscape plan with not only visual buffers and aesthetic benefits but provides the simultaneous environmental improvement through diversification of plantings and the abundance of proposed vegetation. Further, DER requested that the applicant provide screenshots of the NYS DEC Environmental Resources Mapper to substantiate the responses regarding these resources. Based on the aforementioned, it is not anticipated that there will be significant adverse impacts to flora and fauna as a result of the proposed project.

Surface Waters

The subject property does not contain, nor lie in the vicinity of, any surface water body. The site is currently a commercial use in an industrial zone and the proposed use would not be a likely source of impairment to surface waters. During construction activity, site disturbance will be managed in accordance with all requirements of the SWPPP; erosion and sediment control measures and best management practices will be utilized to ensure that there are no adverse environmental impacts as it pertains to the minor construction activity. Given the aforementioned, it is not anticipated that the proposed project will have a significant adverse impact to the local surface waters.

Groundwater

Groundwater in the vicinity of the property is derived from infiltration of precipitation through the ground surface and surficial deposits to the water table. Approximately half of the precipitation that reaches the land surface infiltrates and enters the groundwater system. The water table is the upper limit of the groundwater reservoir and is bounded beneath by impervious bedrock which is located approximately 1,100 feet below grade. Local groundwater gradient is expected to follow surface topography; therefore, groundwater flow near the Subject Property is expected to flow to the south. Groundwater is at a depth of approximately 60 feet below land surface. The proposed action will discharge sanitary waste to the existing Nassau County sanitary sewer connection which serves the site. The proposed action is not within the aquifer protection overlay district and is not likely to contribute to any adverse environmental impacts as it pertains to groundwater. Based on the foregoing, it is not anticipated that the proposed action will result in significant impacts with respect to groundwater resources

Special Groundwater Protection Area (SGPA)/Critical Environmental Area (CEA)

The subject property is not located in or substantially contiguous to the SGPA or in any other area designated as a CEA by the Town of Oyster Bay. Given this fact, it is not anticipated that the proposed action would have any adverse impacts on critical environmental areas within the Town of Oyster Bay.

Air Quality, Odors, and Noise

The proposed action does not involve activities that are likely to produce significant air quality impacts, noise or odors pursuant to SEQRA. The proposed action is location within an industrial area, not adjacent to any residences, and environmental impacts to noise, air quality and odors will be further mitigated by the extensive landscaping (serving as a visual buffer, providing noise attenuation, and air quality mitigation). Uses generating noise at the site are beholden to the Town of Oyster Bay requirements pertaining to noise during construction activity and upon project completion. Minor impacts may occur during construction activity; however, best management practice will be deployed and the applicant provided additional measures during the TEQR process in order to provide sufficient dust mitigation, and soil and erosion and sediment control measures to the satisfaction of DER, and will be further reviewed by DPW in accordance with the SPDES General Permit for Stormwater Discharges from Construction Activities and applicable section of Town Code.

Additionally, DER specifically requested that the applicant meaningfully consider applying environmentally sustainable principles as it pertains to the secondary impacts of site redevelopment and ultimate contributions to greenhouse gases, which was addressed by the applicant proposing to install a number of climate smart community principles (described in the section of this report, "Energy"). While these minor environmental considerations may not provide a significant, tangible environmental enhancement, it is a testament to the reasonable and feasible accommodations that can be incorporated into the design and adheres to the climate smart community principles encouraged by the Town. The small steps towards environmental sustainability further have the effect of minimizing and mitigating cumulative adverse impacts of multiple redevelopment projects over time. In summation, it is not anticipated that the proposed project will impose a significant adverse environmental impact during construction activity as it pertains to noise, odors or air quality. Further, it is not expected that the redeveloped site will result in significant impacts with respect to air quality, odors, or noise upon build-out as it pertains to the proposed action pursuant to SEQR.

Water Usage and Sewage Generation

The EAF indicates that the proposed project will not significantly increase water consumption at the site. The action itself would not be considered a significant generator of sewage nor would the proposed project place a demand on the water supply infrastructure that would adversely impact the environment. Further, DER requested that the applicant consider utilizing xeriscaping techniques and native plantings which are naturally adapted to the existing climatic conditions thereby decreasing potential water needs, which was meaningfully considered and added to the final design element where possible. Energy efficient and low-flow fixtures have been incorporated into the final design where feasible. The site presently is served by public water from the Hicksville Water District. Sanitary wastewater, which will be generated at approximately the same rate at which domestic water is consumed, will be discharged to an existing Nassau County sewer connection that serves the site. This sewage will be conveyed to the Cedar Creek plant for treatment and effluent discharge to the Atlantic Ocean.

Based on Nassau County Department of Health (NCDH) Ordinance, evidence must be provided to the NCDH indicating that all water mains constructed as part of the development will be deeded to the public water supplier; along with a dedicated easement as may be necessary, to assure proper operation, repair and maintenance. Dead-end water mains shall not be proposed unless approved by the NCDH pursuant to conditions in Article VI of the NCPHO. All water mains should be connected to adjacent street mains or otherwise looped for improved water distribution. Also, the developer must comply with all water supplier requirements for backflow prevention devices on water service lines. Based on the available information, it is not expected that the additional water consumption and sewage generation resulting from the proposed project will not place a significant burden on the operations of the local Water District or the Nassau County sewer system.

Solid Waste

The information provided in the TOB EAF Addendum indicates that the proposed project will not generate a significant amount of solid waste. Waste material will be collected by private carter for transport to existing solid waste disposal facilities. There will be relatively minor amount of construction debris generated as part of the proposed action. All vegetation removal and waste produced as a result of construction activities will be disposed of in accordance with standard industry practices. Further, as previously noted, DER requested that the applicant meaningfully consider the environment and provide additional information as it pertains to recycling and waste reduction measures.

The increased solid waste will be cardboard and plastic and will be compacted and recycled. Any concrete construction waste will be trucked to South Shore Materials Inc. for recycling. Any metal construction waste will be trucked to a certified metal recycling facility. (Gershow Recycling, Two Brothers Scrap Metal, etc.) Any Miscellaneous Construction waste will be put in dumpsters for picked up by a licensed carting company (Waste Management, National Waste Services, Superior Waste, etc.) Based on this information, and considering that the solid waste generated by the proposed action will not be a significant producer or solid waste, it is not anticipated that the proposed action will adversely impact solid waste management services in the Town of Oyster Bay.

Hazardous Materials/Human Health and Safety

While the site itself is not the subject of active on-going remediation activity, numerous properties in the project vicinity are listed on various NYSDEC databases. Not only did DER request that the applicant provided additional detailed information but DER also contacted NYSDEC to discuss the proposed action and potential adverse environmental impacts as it pertains to hazardous materials/contamination, and human health and safety. Specifically, Due to historical prior land use activities of surrounding properties, DER had concerns pertaining to potential soil vapor intrusion. However, based on conversation with NYSDEC Remedial Unit, and consideration of depth to groundwater and soil conditions, we believe that the potential for risk and exposure does not warrant the preparation of supplemental environmental assessments at this phase of the SEQR process. However, should any potentially contaminated soil become obvious during excavation activity, the proper regulatory agencies should be contacted and all proper procedures followed. Given the aforementioned, DER believes that sufficient information has been provided to ensure that proper procedures are in place and as long as regulatory protocols are followed as indicated in the various documents reviewed pertaining to these parameters, there should be no significant adverse environmental impacts regarding same. The information contained in this section is a brief summary of the significant amount of information reviewed by DER; if the lead agency has any questions

or requires clarification additional information will be provided upon request. Therefore, DER expects that there are no anticipated significant adverse impacts as it pertains to hazardous materials and/or the potential to adversely impact human health and safety as a result of the proposed action.

Open Space and Recreation

There are no parks or recreation areas in the immediate vicinity of the proposed project. The proposed project constitutes private property and has not been redeveloped into open space or parkland; therefore the community will not be disadvantaged by the loss of open space or parkland as a result of the proposed action. Further, the proposed action would not entail uses that would preclude access to any parkland or recreation areas in the nearby area. Based on these considerations, it is concluded that the proposed action will not result in significant adverse impacts with respect to recreational facilities and open space opportunities.

Other Community Services

The proposed facility will not generate any school-aged children that would attend the school district. The proposed facility is a commercial use, which will generate school taxes without placing any additional significant demand on public school facilities. Any increased demand on other public services is expected to be minor and is not anticipated to cause a significant adverse impact on community services.

Visual Resources and Community Character

The proposed action involves the redevelopment of the site with enhanced landscaping and aesthetic improvements as compared to the existing condition. The proposed plan will provide not only landscape screening but enhanced biodiversity and overall improved aesthetic. This should all be taken within the context that the proposed project is within in industrial zone surrounded by commercial uses. The proposed project is consistent with surrounding community character. There are no particularly significant viewsheds in the immediate vicinity or surrounding area. Building heights conform to the allowable maximum building height in the LI District and will not require a variance. Based on DER's evaluation pursuant to SEQR guidelines, in as much as the proposed project is consistent with the existing zoning, it is not anticipated that the proposed project will result in any significant adverse impacts to visual resources or community character as a result of the implementation of the proposed action.

Historic and Archaeological Resources

The subject property does not contain historically significant resources and lacks the characteristics which would suggest the potential presence of significant archaeological resources. The applicant provided information from the Cultural Resources Information System (CRIS) database, which is updated regularly by the State Office of Parks, Recreation and Historic Preservation - State Historic Preservation Office Division (SHPO). It should also be noted that determination from SHPO is also required pursuant to the requirements of the SPDES Permit, which prior to MS4 SWPPP Acceptance. It is unlikely that the proposed project is within or substantially contiguous to any historic archeological areas of significance that may be impacts by the proposed project. Therefore, is not anticipated that the proposed project will have any significant impact on historic or archaeological resources.

Additional information regarding the environmental review of the subject application may be obtained by contacting Julia Schneider, Director of TEQR, of the Town Environmental Quality Review Division. If the lead agency concurs with this recommendation, the NYS Short EAF should be signed and returned to DER for filing and completion of the SEQR process.

Town of Oyster Bay
Short Environmental Assessment Form
ADDENDUM

Town of Oyster Bay Department of Environmental Resources
29 Spring Street
Oyster Bay, NY 11771

INSTRUCTIONS: This document is an Addendum to be used for any proposed development project in the Town of Oyster Bay for which the New York State Short Environmental Assessment Form (NYS SEAF) is completed pursuant to the State Environmental Quality Review Act (SEQRA). Please provide any additional information that will be helpful to understanding the proposed action and its potential impacts on the environment as an attachment to this form. Based on the Town's review of the SEAF and this Addendum, additional information may be requested and may be subject to further verification and public review.

Please enclose a check or money order in the amount of $100.00 for the requisite review fee, made payable to "Supervisor, Town of Oyster Bay", and remit with the completed SEAF Addendum to the address specified above (along with the completed New York State SEAF, if not already submitted). Depending on the type of project and level of review required, additional fees may apply.

If you have any questions, need assistance in completing this form, or would like to obtain an electronic version of this form, please contact the Department of Environmental Resources at (516) 677-5824, between 9:00 a.m. and 4:45 p.m. on Town of Oyster Bay business days.

NAME OF PROPOSED ACTION/PROJECT: Nassau Candy - Building Addition				
LOCATION OF PROPOSED ACTION/PROJECT (Nassau County Tax Map Designation) SECTION: 11	BLOCK: 327	LOT(S): 406, 408, 412, 422 & 424		
NAME OF PROPERTY OWNER 300 Duffy Real Estate, LLC		BUSINESS TELEPHONE (516) 433-7100		
ADDRESS 300 Duffy Avenue				
CITY/ POST OFFICE Hicksville			STATE NY	ZIP CODE 11801
NAME OF CONSULTING FIRM Bilow Garrett Group Architects and Planners, P.C.	NAME OF CONSULTANT CONTACT David N. Bilow	BUSINESS TELEPHONE (201) 807-0407		
ADDRESS 161 Main Street	EMAIL ADDRESS dbilow@bilowgarrett.com			
CITY/POST OFFICE Ridgefield Park			STATE NJ	ZIP CODE 07660
NAME OF LEGAL REPRESENTATIVE Ruskin Moscou Faltischek, P.C.		BUSINESS TELEPHONE (516) 663-6600		
ADDRESS 1425 Rexford Plaza, Glen Curtiss Blvd., East Tower, 15th Floor				
CITY/POST OFFICE Uniondale			STATE NY	ZIP CODE 11553

A. Site Description

1. Previous use(s) of the site of the proposed action:
   Existing - Warehouse/Distributor Center For Homemade Candy Proposed - Same

NOTE: A Phase I Environmental Site Assessment or equivalent information regarding on-site conditions typically will be requested for any property which currently contains or previously contained a facility or use (e.g., gasoline service station, motor vehicle repair shop, manufacturing plant, etc.) entailing the generation, storage or use of significant quantities of hazardous substances or wastes.

2. Approximate Acreages

	Without Proposed Action	After Completion
Forested	Ø acres	Ø acres
Meadow or Brushland	Ø acres	Ø acres
Freshwater Wetland	Ø acres	Ø acres
Tidal Wetland	Ø acres	Ø acres
Unvegetated (rock, earth or fill)	Ø acres	Ø acres
Roads, Buildings and Other Paved Surfaces	6.92 acres	7.81 acres
Turf Grasses	Ø acres	Ø acres
Other Landscaping Vegetation	3.46 acres	2.57 acres
Other (indicate type)	Ø acres	Ø acres

B. Description of Proposed Action

1. On-site parking capacity for the overall site (i.e., marked parking stalls):

227	# of existing spaces + 109 Land Banked
69	# of proposed spaces (separately indicate # of land-banked spaces, if any)
221	# of spaces required for proposed condition under Town of Oyster Bay Zoning Code

2. Estimated maximum increase in site-generated traffic (entering + exiting trips combined) during peak one-hour periods under proposed action:

	Peak-hour two-way traffic volume	Peak-hour period (start time-end time)
Weekday morning		
Weekday afternoon		
Weekend (usually Saturday mid-day)		

Identify source of vehicular trip generation information (e.g., *Trip Generation* manual published by Institute of Transportation Engineers [specify the edition and Land Use Codes employed], actual counts [include date of counts and who conducted them], etc.).
N/A - Facility Will Be Used for Extra Storage Space. See Attachment #1 for Further Explanation.

3. Total volume of excavation to occur on-site under proposed action: ± 1,800 cubic yards See attachment #1
Purpose of excavation (e.g., basement, drainage structures, etc.): Building Foundation - Drainage Structure
Total volume of fill to be imported to site under proposed action: Ø cubic yards

4. Does the site of the proposed action contain slopes with gradient steeper than 25%? ☐ Yes ☒ No
   a. If yes, what is the area with slopes greater than 25% that would be disturbed under proposed action? _____ acres
   b. If yes, what measures will be implemented to mitigate erosion and sediment transport?

5. Describe any vegetation to be removed under proposed action, particularly any trees with diameter greater than 8 inches (measured 4 feet above grade).
We Will Be Cleaning ± 14,500 Sq. Ft. Of Existing Wooded Area

6. Is the site of the proposed action located in the Special Groundwater Protection Area? ☐ Yes ☒ No
If yes, refer to Section 246-5.4.7 of Oyster Bay Town Code, Aquifer Protection Overlay (APO) District, and provide the following information:
   a. Proposed Disturbance of Natural Vegetation _____ sq. feet — Maximum Permitted Disturbance of Natural Vegetation (§246-5.4.7.3.1) _____ sq. feet
   b. Proposed Lot Coverage _____ sq. feet — Maximum Permitted Lot Coverage (§246-5.4.7.3.2) _____ sq. feet
   c. Describe proposed action's consistency with the best management practices and other standards set forth in §246-5.4.7.3.3 through §246-5.4.7.3.6:

7. Does the site of the proposed action contain a local historic resource as designated by the Town of Oyster Bay? ☐ Yes ☒ No
   a. If yes, explain/describe:
   See attachment #1

8. Will the proposed action increase average daily water consumption on the subject property (domestic use and irrigation combined)? ☐ Yes ☒ No
   a. If yes, what will be the increase in daily average water consumption on the subject property due to the proposed action? _____ gallons/day
   b. If yes, indicate the source of this information (e.g., actual recorded water use, standard rate [specify reference and unit rate], etc.)

9. Will the proposed action provide increased on-site stormwater storage capacity (e.g., through additional drywells or similar structures) as compared to the existing condition? [X] Yes [ ] No

   a. What will be the capacity of the on-site drainage system under the proposed action, in terms of the design storm event expressed in inches of rainfall? 3 inches

10. Sanitary waste disposal method (e.g., on-site septic system, municipal sewer system, none, etc.):

    Municipal System — existing condition

    Municipal System — proposed action

11. Will the proposed action increase the rate of solid waste generation on the subject property? [X] Yes [ ] No

    a. If yes, what will be the increase in monthly average solid waste generation? _____ tons/month

    b. Indicate the source of this information (e.g., existing data [identify specifically, such as applicant's existing facilities], standard rates [with specific reference citation], etc.)

    Existing Data - Existing Building Produced ± 108 Tons Last Year. See attachment #1 for further information.

12. Describe any hazardous or infectious materials or wastes (e.g., petroleum products, chemicals, medical wastes, etc.) that would be generated, used, stored or processed at the site under the proposed action, and measures (e.g., procedures, protocols, equipment, etc.) that will be implemented to protect the environment from spills, leakage and other incidents.

    N/A

13. If the proposed action involves a non-residential (commercial, industrial, etc.) use, what are the proposed days and hours of operation?

    Building Is Operational ± 20 Hours a Day/5 Days A Week. Deliveries To The Building Typically Occur Between 8AM to 5PM

14. If the proposed action is a non-residential (commercial, industrial, etc.) use on a site which is adjacent to residential uses, describe any measures that will be implemented to minimize potential impacts to the neighboring residences (e.g., screening and buffering, noise-abatement measures, odor-control systems for restaurant kitchen exhaust, litter collection, etc.).

    N/A

15. Is the proposed action part of a larger development plan or a plan that includes future phases? [ ] Yes [X] No

    a. If yes, briefly describe the overall plan (e.g., total number of phases, location and size of land parcels involved, planned uses and/or facilities in future phases, schedule for completion, etc.).

C. Verification

I certify that the information provided in this EAF Addendum is true and accurate to the best of my knowledge.

David N. Bilow, A.I.A.
print name of preparer

Bilow Garrett Group Architects and Planners, P.C.
company name, if applicable

Ridgefield Park — NJ — 07660
city/post office — state — zip code

201-807-0707
telephone

dbilow@bilowgarrett.com
email address

PREPARER'S SIGNATURE: David N. Bilow

TITLE: Partner

DATE: October 2, 2019

Project: Nassau Candy Building Addition
300 Duffy Avenue
Hicksville, NY 11801

Attachment #1

Response to Question #19:

The neighboring property, specifically 344 Duffy Avenue was historically used as a mining operation. The current owners, Winter Brothers Hicksville LLC received a beneficial use determination (BUD) by New York State Department of Environmental Conservation (NYSDEC), dated February 20, 2014 for grade adjustment fill to return the formerly mined site to a level grade for redevelopment. A NYSDEC Solid Waste Management permit was issued for the property on February 6, 2014, which permits the receipt of 2,000 cubic yards of recognizable, uncontaminated concrete rock, brick and soil per day for grade adjustment fill. Winter Bros Hicksville LLC. are required to comply with a number of conditions outlined in the NYSDEC permit. All materials presently on-site have been approved by the NYSDEC. The BUD and the Solid Waste Management Permit are based on an Engineering Report (Revision Number 4) dated January 2014, which contains the environmental protection measures for the import of fill to the site, including, but not limited to: noise, dust, and odor and vector control.

Based on the proposed redevelopment of this site as presented to the Town of Oyster Bay and it is anticipated that the NYSDEC Solid Waste Permit will be terminated upon approval of the redevelopment.

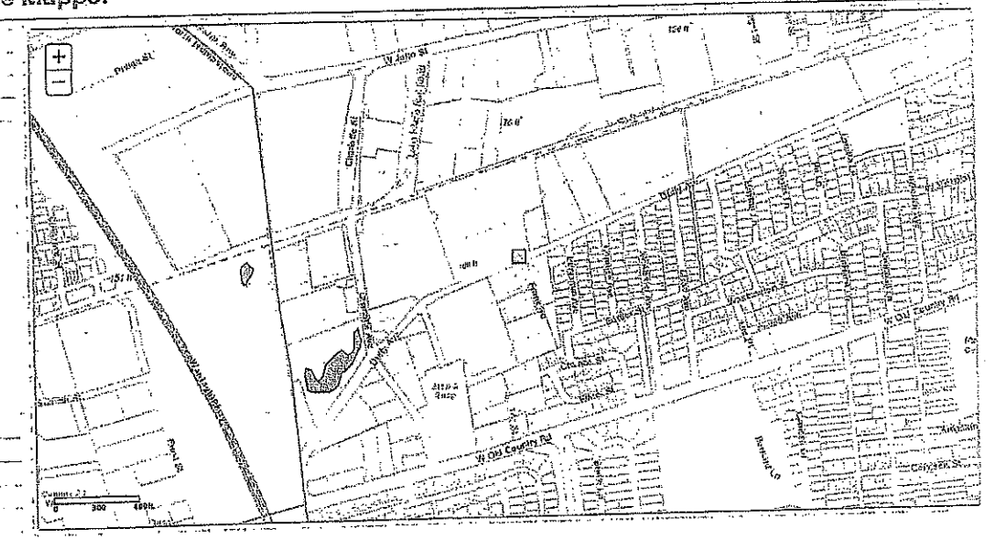

NEW YORK STATE DEPARTMENT OF ENVIRONMENTAL CONSERVATION

Base Map: Topographical

Environmental Resource Mapper

Search

Tools

Layers and Legend

Other Wetland Layers

☑ National Wetlands Inventory

- ▨ Estuarine and Marine Deepwater
- ▨ Estuarine and Marine Wetland
- ▨ Freshwater Emergent Wetland
- ▨ Freshwater Forested/Shrub Wetland
- ▨ Freshwater Pond
- ▨ Lake
- ▨ Other
- ▨ Riverine

Reference Layers

Tell Me More...

Need A Permit?

Contacts

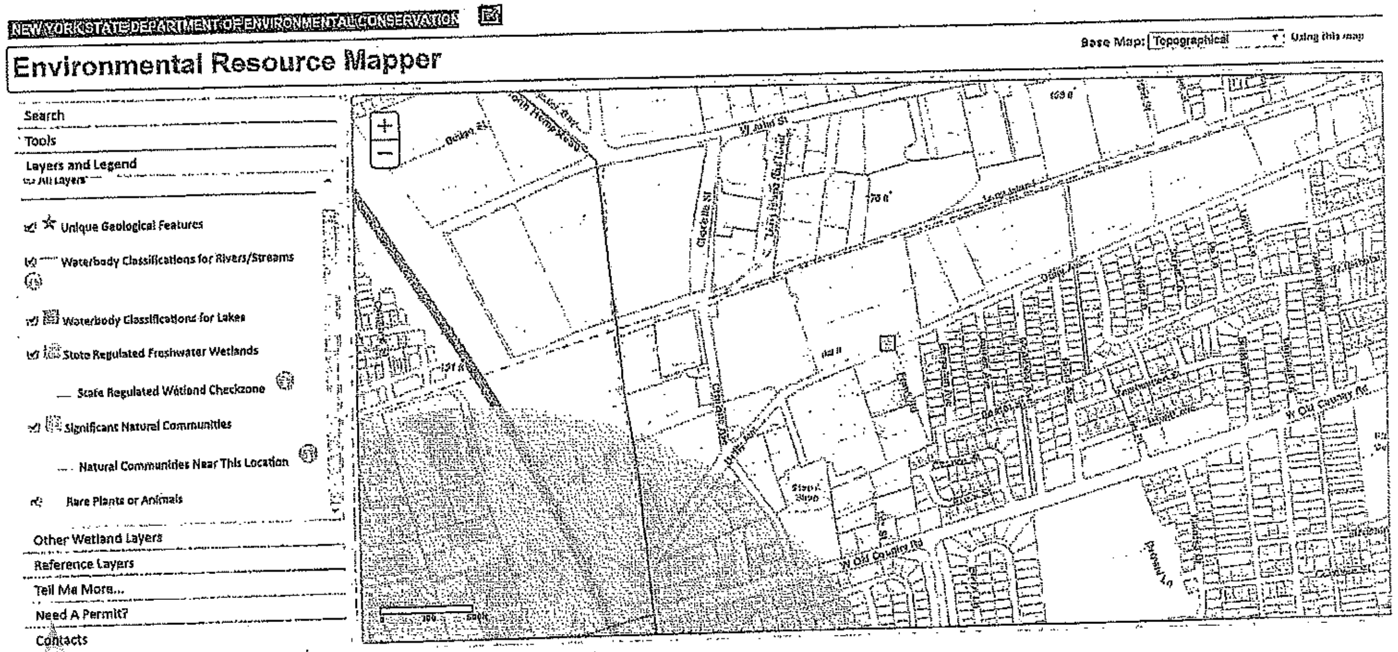

NEW YORK STATE DEPARTMENT OF ENVIRONMENTAL CONSERVATION

Environmental Resource Mapper

Base Map: Topographical ▾ Using this map

- Search
- Tools
- Layers and Legend
  - ☑ All Layers
  - ☑ ☆ Unique Geological Features
  - ☑ Waterbody Classifications for Rivers/Streams
  - ☑ Waterbody Classifications for Lakes
  - ☑ State Regulated Freshwater Wetlands
    - State Regulated Wetland Checkzone
  - ☑ Significant Natural Communities
    - Natural Communities Near This Location
  - ☑ Rare Plants or Animals
- Other Wetland Layers
- Reference Layers
- Tell Me More...
- Need A Permit?
- Contacts

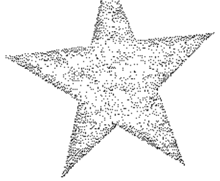

NEW YORK STATE OF OPPORTUNITY | Parks, Recreation, and Historic Preservation

ANDREW M. CUOMO
Governor

ERIK KULLESEID
Commissioner

August 14, 2019

Mr. David Bilow
Principle
Bilow Garrett Group
161 Main Street
Ridgefield Park, NJ 07660

Re: DEC
Nassau Candy Expansion
300 Duffy Ave., Hicksville, NY 11801
19PR05320

Dear Mr. Bilow:

Thank you for requesting the comments of the Office of Parks, Recreation and Historic Preservation (OPRHP). We have reviewed the project in accordance with the New York State Historic Preservation Act of 1980 (Section 14.09 of the New York Parks, Recreation and Historic Preservation Law). These comments are those of the OPRHP and relate only to Historic/Cultural resources. They do not include potential environmental impacts to New York State Parkland that may be involved in or near your project. Such impacts must be considered as part of the environmental review of the project pursuant to the State Environmental Quality Review Act (New York Environmental Conservation Law Article 8) and its implementing regulations (6 NYCRR Part 617).

Based upon this review, it is the opinion of OPRHP that no properties, including archaeological and/or historic resources, listed in or eligible for the New York State and National Registers of Historic Places will be impacted by this project.

If further correspondence is required regarding this project, please be sure to refer to the OPRHP Project Review (PR) number noted above.

Sincerely,

R. Daniel Mackay

Deputy Commissioner for Historic Preservation
Division for Historic Preservation

CRIS HOME SUBMIT SEARCH COMMUNICATE

Welcome Guest User | Contact Us

New Consultation : XOXF28SD2PHK

Nassau Candy

Contacts | Overview | Location | Resources | Attachments | Summary

Step 3: Project Location

Please enter the location of your project. For larger project areas you will be required to draw your project area on a map.

Can you locate your project by entering an address, street intersection, or X,Y coordinates?
Yes

Address | Intersection | Coordinates

House Number: 300
Street Name: Duffy Avenue
City: Hicksville
State: NY ZIP: 11801

Find

Do you want to accept this location or do you need to adjust it?

Accept Location | Adjust Location

* Describe the area affected by your project
Existing asphalt paved area

* Draw a boundary defining your project area using the map provided on the right. Click a series of points outlining the boundary, then double-click on the last point to finish and close the boundary.

Start Drawing

Note: If you have a more accurate boundary of your project area in a shapefile format, you can upload the shapefile as an attachment in Step 5.

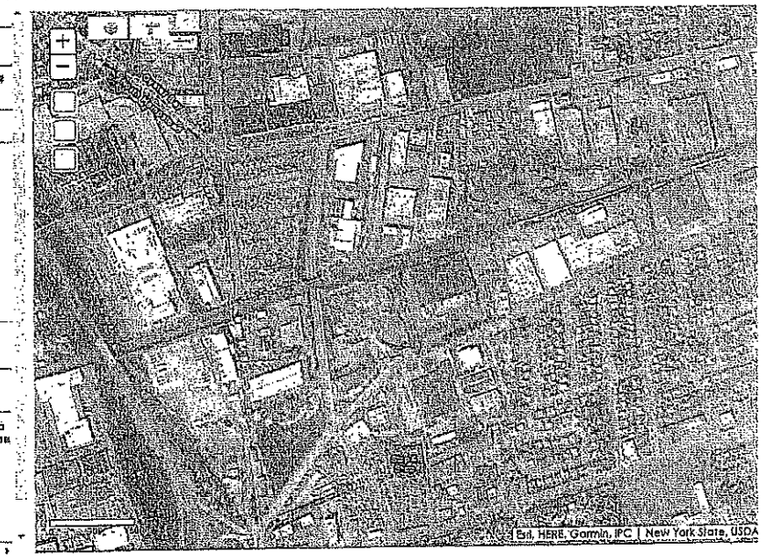

Short Environmental Assessment Form
Part 1 - Project Information

Instructions for Completing

Part 1 – Project Information. The applicant or project sponsor is responsible for the completion of Part 1. Responses become part of the application for approval or funding, are subject to public review, and may be subject to further verification. Complete Part 1 based on information currently available. If additional research or investigation would be needed to fully respond to any item, please answer as thoroughly as possible based on current information.

Complete all items in Part 1. You may also provide any additional information which you believe will be needed by or useful to the lead agency; attach additional pages as necessary to supplement any item.

Part 1 – Project and Sponsor Information

Name of Action or Project:
Nassau Candy Building Addition

Project Location (describe, and attach a location map):
300 Duffy Avenue, Hicksville, New York 11801

Brief Description of Proposed Action:
The project consist of a proposed one (1) story, 19,780 S.F. unattached building addition, expansion of existing parking lot to provide 67 additional paved spaces, installation of new LED site lighting fixtures, installation of new landscaping and installation of additional storm drainage pools.

Name of Applicant or Sponsor:	Telephone: 516-433-7100
300 Duffy Real Estate, LLC - Mr. Garrett Stier	E-Mail: Garrett.Stier@nassaucandy.com

Address:		
300 Duffy Avenue		
City/PO: Hicksville	State: NY	Zip Code: 11801

	NO	YES
1. Does the proposed action only involve the legislative adoption of a plan, local law, ordinance, administrative rule, or regulation? If Yes, attach a narrative description of the intent of the proposed action and the environmental resources that may be affected in the municipality and proceed to Part 2. If no, continue to question 2.	☑	☐
2. Does the proposed action require a permit, approval or funding from any other government Agency? If Yes, list agency(s) name and permit or approval: See attachment #3	☐	☑

3. a. Total acreage of the site of the proposed action? 10.38 acres
   b. Total acreage to be physically disturbed? 1.9 acres
   c. Total acreage (project site and any contiguous properties) owned or controlled by the applicant or project sponsor? 10.38 acres

4. Check all land uses that occur on, are adjoining or near the proposed action:
5. ☐ Urban ☐ Rural (non-agriculture) ☑ Industrial ☑ Commercial ☐ Residential (suburban)
   ☐ Forest ☐ Agriculture ☐ Aquatic ☐ Other(Specify):
   ☐ Parkland

	NO	YES	N/A
5. Is the proposed action,			
a. A permitted use under the zoning regulations?	☐	☑	☐
b. Consistent with the adopted comprehensive plan?	☐	☑	☐

	NO	YES
6. Is the proposed action consistent with the predominant character of the existing built or natural landscape?	☐	☑
7. Is the site of the proposed action located in, or does it adjoin, a state listed Critical Environmental Area? If Yes, identify: _____	☑	☐
8. a. Will the proposed action result in a substantial increase in traffic above present levels? SEE ATTACHMENT #4	☑	☐
b. Are public transportation services available at or near the site of the proposed action?	☐	☑
c. Are any pedestrian accommodations or bicycle routes available on or near the site of the proposed action?	☑	☐
9. Does the proposed action meet or exceed the state energy code requirements? If the proposed action will exceed requirements, describe design features and technologies: _____	☐	☑
10. Will the proposed action connect to an existing public/private water supply? If No, describe method for providing potable water: _____	☐	☑
11. Will the proposed action connect to existing wastewater utilities? If No, describe method for providing wastewater treatment: _____	☐	☑
12. a. Does the project site contain, or is it substantially contiguous to, a building, archaeological site, or district which is listed on the National or State Register of Historic Places, or that has been determined by the Commissioner of the NYS Office of Parks, Recreation and Historic Preservation to be eligible for listing on the State Register of Historic Places?	☑	☐
b. Is the project site, or any portion of it, located in or adjacent to an area designated as sensitive for archaeological sites on the NY State Historic Preservation Office (SHPO) archaeological site inventory?	☑	☐
13. a. Does any portion of the site of the proposed action, or lands adjoining the proposed action, contain wetlands or other waterbodies regulated by a federal, state or local agency?	☑	☐
b. Would the proposed action physically alter, or encroach into, any existing wetland or waterbody? If Yes, identify the wetland or waterbody and extent of alterations in square feet or acres: _____	☑	☐

14. Identify the typical habitat types that occur on, or are likely to be found on the project site. Check all that apply:

☐ Shoreline ☐ Forest ☐ Agricultural/grasslands ☐ Early mid-successional

☐ Wetland ☐ Urban ☐ Suburban

	NO	YES
15. Does the site of the proposed action contain any species of animal, or associated habitats, listed by the State or Federal government as threatened or endangered?	☑	☐
16. Is the project site located in the 100-year flood plan?	☑	☐
17. Will the proposed action create storm water discharge, either from point or non-point sources?	☐	☑
If Yes, a. Will storm water discharges flow to adjacent properties?	☑	☐
b. Will storm water discharges be directed to established conveyance systems (runoff and storm drains)?	☐	☑
If Yes, briefly describe: New subsurface drainage pools are to be installed		
18. Does the proposed action include construction or other activities that would result in the impoundment of water or other liquids (e.g., retention pond, waste lagoon, dam)? If Yes, explain the purpose and size of the impoundment:	☑	☐
19. Has the site of the proposed action or an adjoining property been the location of an active or closed solid waste management facility? If Yes, describe: See Attachment #1	☐	☑
20. Has the site of the proposed action or an adjoining property been the subject of remediation (ongoing or completed) for hazardous waste? If Yes, describe: See Attachment #2	☐	☑

I CERTIFY THAT THE INFORMATION PROVIDED ABOVE IS TRUE AND ACCURATE TO THE BEST OF MY KNOWLEDGE

REVISED 11/6/19

Applicant/sponsor/name: Garrett Siler Date: August 23, 2019

Signature: Title: Director of Marketing

PRINT FORM

Attachment #3

Response to Question #2:

The following is the list of government Agencies that the proposed action requires a permit, approval or funding from:

Town of Oyster Bay – Town Board approval
(Revised 11/06/19)

Town of Oyster Bay – Department of Planning and Development -
Amended Site Plan Approval

Town of Oyster Bay – Building Department – Building Permit

Town of Oyster Bay – Department of Public Work –
Stormwater Pollution Plan (SWPPP) Approval

Nassau County Industrial Development Agency – IDA Funding

NYS Department of Environmental Conservation – Notice of Intent for Coverage under Stormwater General Permit for Construction Activity

PROPOSED PARKING CALCULATIONS FOR:
NASSAU CANDY BUILDING ADDITION
300 DUFFY AVE, HICKSVILLE, NY 11801

ISSUED BY: BILOW GARRETT GROUP ARCHITECTS AND PLANNERS
DATED: JUNE 28, 2019

PARKING CALCULATIONS

DATA	REQUIRED	EXISTING	PROPOSED	OVERALL
PARKING WAREHOUSE/ OFFICES	WAREHOUSE 1 SPACE/1,000 S.F. OFFICE 1 SPACE/200 S.F.	WAREHOUSE 149,012 S.F. WAREHOUSE 149,012/1,000=150 SPACES OFFICE 10,066 S.F. OFFICES 10,066/200= 51 SPACES WAREHOUSE 150 OFFICE 51 TOTAL SPACES REQ'D 201 PROVIDED 227 PARKING SPACES 119 LANDBANKED SPACES (10 EXISTING SPACES REQUIRED TO BE REMOVED IF LANDBANK SPACES USED = 217 SPACES REMAINING) 336 TOTAL SPACES INCLUDING (8) HANDICAPPED ACCESSIBLE SPACES	WAREHOUSE 19,780 S.F. WAREHOUSE 19,780/1,000= 20 SPACES 201+20 = 221 REQUIRED EXISTING 227 PARKING SPACES 73 TO BE REMOVED 154 PARKING SPACES TO REMAIN PROVIDED 154 EXIST.PARKING SPACES 67 NEW PARKING SPACES 51 LANDBANKED SPACES (3 EXISTING SPACES REQUIRED TO BE REMOVED IF LANDBANK SPACES USED = 151 SPACES REMAINING) 269 TOTAL SPACES INCLUDING (8) HANDICAPPED ACCESSIBLE SPACES	221 SPACES REQUIRED 269 TOTAL SPACES PROVIDED INCLUDING: (8) HANDICAPPED ACCESSIBLE SPACES
LOADING SPACES	1 PER FIRST 10,000 S.F. + 1 PER ADDITIONAL 100,000 S.F. OF OFFICE AREA 2 LOADING DOCK SPACES REQUIRED FOR OFFICE AREA	SEE BELOW	NO ADDITIONAL OFFICE AREA PROPOSED	11 TOTAL LOADING DOCK SPACES REQUIRED 28 TOTAL LOADING DOCK SPACES EXISTING 6 LOADING DOCK SPACES TO BE REMOVED DUE TO ADDITION 4 NEW LOADING DOCK SPACES PROVIDED 26 TOTAL LOADING DOCK PROVIDED
	1 PER FIRST 10,000 S.F. + 1 PER ADDITIONAL 20,000 S.F. OF WAREHOUSE AREA 8 LOADING DOCK SPACES REQUIRED FOR WAREHOUSE AREA	SEE BELOW	1 LOADING ADDITIONAL DOCK SPACE REQUIRED FOR WAREHOUSE AREA	
	10 TOTAL LOADING DOCK SPACES REQUIRED	28 LOADING DOCK SPACES EXISTING	4 LOADING DOCK SPACE PROVIDED (6 LOADING DOCK SPACES TO BE REMOVED DUE TO ADDITION)	

Agency Use Only [If applicable]	
Project:	300 Duffy Ave_Hicksville
Date:	11/6/2019

Short Environmental Assessment Form
Part 2 - Impact Assessment

Part 2 is to be completed by the Lead Agency.
Answer all of the following questions in Part 2 using the information contained in Part 1 and other materials submitted by the project sponsor or otherwise available to the reviewer. When answering the questions the reviewer should be guided by the concept "Have my responses been reasonable considering the scale and context of the proposed action?"

	No, or small impact may occur	Moderate to large impact may occur
1. Will the proposed action create a material conflict with an adopted land use plan or zoning regulations?	☑	☐
2. Will the proposed action result in a change in the use or intensity of use of land?	☑	☐
3. Will the proposed action impair the character or quality of the existing community?	☑	☐
4. Will the proposed action have an impact on the environmental characteristics that caused the establishment of a Critical Environmental Area (CEA)?	☑	☐
5. Will the proposed action result in an adverse change in the existing level of traffic or affect existing infrastructure for mass transit, biking or walkway?	☑	☐
6. Will the proposed action cause an increase in the use of energy and it fails to incorporate reasonably available energy conservation or renewable energy opportunities?	☑	☐
7. Will the proposed action impact existing: a. public / private water supplies?	☑	☐
b. public / private wastewater treatment utilities?	☑	☐
8. Will the proposed action impair the character or quality of important historic, archaeological, architectural or aesthetic resources?	☑	☐
9. Will the proposed action result in an adverse change to natural resources (e.g., wetlands, waterbodies, groundwater, air quality, flora and fauna)?	☑	☐
10. Will the proposed action result in an increase in the potential for erosion, flooding or drainage problems?	☑	☐
11. Will the proposed action create a hazard to environmental resources or human health?	☑	☐

PRINT FORM

Agency Use Only [If applicable]

Project: 300 Duffy Ave./Hicksville

Date: 11/6/2019

Short Environmental Assessment Form
Part 3 Determination of Significance

For every question in Part 2 that was answered "moderate to large impact may occur", or if there is a need to explain why a particular element of the proposed action may or will not result in a significant adverse environmental impact, please complete Part 3. Part 3 should, in sufficient detail, identify the impact, including any measures or design elements that have been included by the project sponsor to avoid or reduce impacts. Part 3 should also explain how the lead agency determined that the impact may or will not be significant. Each potential impact should be assessed considering its setting, probability of occurring, duration, irreversibility, geographic scope and magnitude. Also consider the potential for short-term, long-term and cumulative impacts.

See TEQR Report, dated 11/6/2019 from the Town of Oyster Bay Department of Environmental Resources (DER). This Report was prepared to thoroughly assess each potential impact within the context of setting, probability of occurring, duration, irreversibility, geographic scope and magnitude. Further, each section of the TEQR Report has been prepared to encompass the potential short-term, long-term and cumulative impacts of the proposed action pursuant to SEQR, which forms the basis and substantiates the recommended determination of significance. Mitigation measures/design elements that have been incorporated into the proposed project to avoid or reduce potential impacts are also summarized within the attached TEQR Report.

☐ Check this box if you have determined, based on the information and analysis above, and any supporting documentation, that the proposed action may result in one or more potentially large or significant adverse impacts and an environmental impact statement is required.

☑ Check this box if you have determined, based on the information and analysis above, and any supporting documentation, that the proposed action will not result in any significant adverse environmental impacts.

Town of Oyster Bay Town Board Name of Lead Agency	Date
Joseph Nocella Print or Type Name of Responsible Officer in Lead Agency	Town Attorney Title of Responsible Officer
Signature of Responsible Officer in Lead Agency	Julie Schneider Signature of Preparer (if different from Responsible Officer)

PRINT FORM

Reviewed By
Office of Town Attorney

WHEREAS, Steven C. Ballas, Comptroller, by memorandum dated November 8, 2019, advised that pursuant to the Town of Oyster Bay Procurement Policy, a request for proposals (RFP) was issued to six (6) firms, and was placed on the Town of Oyster Bay website, to procure Workers Compensation Liability Actuarial Consultant Services to the Town, for a one (1) year period, from December 1, 2019, through November 30, 2020, with the provision of two (2), one-year extension options, if mutually agreeable; and

WHEREAS, following a review and evaluation of said six (6) responses by an RFP review committee, based on the established criteria in conjunction with a set of guidelines for the purpose of choosing the most qualified firm, and in compliance with requirements of Guidelines 6 and 9 of the Town's Procurement Policy, Comptroller Ballas, by said memorandum, requested that the Town Board authorize the Office of the Comptroller to utilize the services of Sound Actuarial Consulting, LLC, 403 East Main Street, Port Jefferson Village, New York 11777, the highest ranked firm in accordance with the specifications contained in the RFP for the purposes of providing Workers Compensation Liability Actuarial Consultant Services to the Town; and

WHEREAS, Comptroller Ballas further requests, by said memorandum, Town Board authorization for the Supervisor, his designee and/or the Comptroller to execute an agreement with Sound Actuarial Consulting, LLC for the purpose of providing Workers Compensation Liability Actuarial Consultant Services; and

WHEREAS, the value of the actuarial services for the one (1) year financial period is to be $6,500.00 and funds for payment of said services are available in Account No. CMP A 1315 44800 000 0000,

NOW, THEREFORE, BE IT RESOLVED, That the recommendations as hereinabove set forth are accepted, and the Comptroller is hereby authorized to utilize the services of Sound Actuarial Consulting, LLC for the purposes of providing Workers Compensation Liability Actuarial Consultant Services to the Town for a period of one (1) year, with two (2) extensions, mutually agreeable, each extension being one (1) year and the Supervisor, his designee and/or Comptroller to execute said agreement,

RESOLVED, That the Comptroller is hereby authorized and directed to issue a total encumbrance order in a total amount not to exceed $6,500.00 to Sound Actuarial Consulting, LLC, upon presentation of a duly certified claim, after audit, to be drawn from account No. CMP A 1315 44800 000 0000.

#

The foregoing resolution was declared adopted after a poll of the members of the Board; the vote being recorded as follows:

Supervisor Saladino	Aye
Councilman Muscarella	Aye
Councilman Macagnone	Aye
Councilwoman Johnson	Aye
Councilman Imbroto	Aye
Councilman Hand	Aye
Councilman Labriola	Aye

22

TOWN OF OYSTER BAY

Inter-Departmental Memo

November 1, 2019

To: **MEMORANDUM DOCKET**

From: **STEVEN C. BALLAS, COMPTROLLER**

Subject: **AWARD OF WORKERS COMPENSATION LIABILITY ACTUARIAL CONSULTANT SERVICES RFP**

SUPPLEMENTAL MEMO TO FOLLOW

Additional information will be provided in a Supplemental Docket Memorandum to follow. Therefore, we recommend and request that a space be reserved at the next Town Board meeting on November 19, 2019.

STEVEN C. BALLAS
COMPTROLLER

SCB/cmw

cc: Town Attorney (9)
Reading File

20

TOWN OF OYSTER BAY

Inter-Departmental Memo

November 8, 2019

To: **MEMORANDUM DOCKET**

From: **STEVEN C. BALLAS, COMPTROLLER**

Subject: **AWARD OF WORKERS COMPENSATION LIABILITY ACTUARIAL CONSULTANT SERVICES RFP**

SUPPLEMENTAL MEMO TO MD NOVEMBER 5, 2019, ITEM # 22

Pursuant to the Town of Oyster Bay Procurement Policy, the Office of the Comptroller requested Requests for Proposals (RFPs) from six (6) firms for providing Workers Compensation Liability Actuarial Consultant Services to the Town for a one-year period with an option, at the discretion of the Town, of extending the services to second and third year reporting periods. In addition, the RFP was posted on the Town's website.

Of the six (6) firms, five (5) firms responded by the October 21, 2019 response date. The evaluation and selection process was performed in compliance with the requirements of Guidelines 6 and 9 of the Town of Oyster Bay Procurement Policy. An RFP Review Committee was formed with six (6) employees from different departments within the Town. Each of the five (5) responses were reviewed, evaluated and rated in detail by the RFP review committee pursuant to the Town of Oyster Bay Procurement Policy.

Of the five (5) firms reviewed and evaluated, Sound Actuarial Consulting, LLC, 403 East Main Street, Port Jefferson Village, NY 11777 was the highest ranked firm.

Accordingly, the Office of the Comptroller respectfully requests Town Board authorization for the Town to enter into an engagement with Sound Actuarial Consulting, LLC and further, authorize the Supervisor, his designee and/or the Comptroller to execute said engagement for the purpose of providing Workers Compensation Liability Actuarial Consultant Services from December 1, 2019 through November 30, 2020, with the provision of two (2), one-year extension options, if mutually agreeable. The value of the actuarial services for the one (1) year financial period engagement is to be $6,500.00. Funds are available in account number CMP A 1315 44800 000 0000.

STEVEN C. BALLAS
COMPTROLLER

SCB/rpp

cc: Town Attorney (9)
Internal Audit Division (RFP file)
Reading File

Reviewed By
Office of Town Attorney

WHEREAS, Steven C. Ballas, Comptroller, by memorandum dated November 8, 2019, advised that pursuant to the Town of Oyster Bay Procurement Policy, a request for proposals (RFP) was issued to eight (8) firms, and was placed on the Town of Oyster Bay website, to procure Other Post Employment Benefit Actuarial Consultant Services to the Town, for a one (1) year period, from December 1, 2019, through November 30, 2020, with the provision of two (2), one-year extension options, if mutually agreeable; and

WHEREAS, following a review and evaluation of said eight (8) responses by an RFP review committee, based on the established criteria in conjunction with a set of guidelines for the purpose of choosing the most qualified firm, and in compliance with requirements of Guidelines 6 and 9 of the Town's Procurement Policy, Comptroller Ballas, by said memorandum, requested that the Town Board authorize the Office of the Comptroller to utilize the services of USI Consulting Group, 95 Glastonbury Boulevard, Suite 102, Glastonbury, CT 06033, the highest ranked firm in accordance with the specifications contained in the RFP for the purposes of providing Other Post Employment Benefit Actuarial Consultant Services to the Town; and

WHEREAS, Comptroller Ballas further requests, by said memorandum, Town Board authorization for the Supervisor, his designee and/or the Comptroller to execute said agreement with USI Consulting Group for the Purpose of providing Other Post Employment Benefit Actuarial Consultant Services; and

WHEREAS, the value of the accounting services for the one (1) year financial period is to be $7,900.00 plus $1,000.00 for a report update if needed and funds for payment of said services are available in Account No. CMP A 1315 44800 000 0000,

NOW, THEREFORE, BE IT RESOLVED, That the recommendations as hereinabove set forth are accepted, and the Comptroller is hereby authorized to utilize the services of USI Consulting Group for the purposes of providing Other Post Employment Benefit Actuarial Consultant Services to the Town for a period of one (1) year, with two (2) extensions, mutually agreeable, each extension being one (1) year and the Supervisor, his designee and/or Comptroller to execute said agreement,

RESOLVED, That the Comptroller is hereby authorized and directed to issue a total encumbrance order in a total amount not to exceed $8,900.00 to USI Consulting Group, upon presentation of a duly certified claim, after audit, to be drawn from account No. CMP A 1315 44800 000 0000.

-#-

The foregoing resolution was declared adopted after a poll of the members of the Board; the vote being recorded as follows:

Supervisor Saladino	Aye
Councilman Muscarella	Aye
Councilman Macagnone	Aye
Councilwoman Johnson	Aye
Councilman Imbroto	Aye
Councilman Hand	Aye
Councilman Labriola	Aye

23

TOWN OF OYSTER BAY

Inter-Departmental Memo

November 1, 2019

To: **MEMORANDUM DOCKET**

From: **STEVEN C. BALLAS, COMPTROLLER**

Subject: **AWARD OF OTHER POST EMPLOYMENT BENEFIT ACTUARIAL CONSULTANT SERVICES RFP**

SUPPLEMENTAL MEMO TO FOLLOW

Additional information will be provided in a Supplemental Docket Memorandum to follow. Therefore, we recommend and request that a space be reserved at the next Town Board meeting on November 19, 2019.

STEVEN C. BALLAS
COMPTROLLER

SCB/cmw

cc: Town Attorney (9)
Reading File

21

TOWN OF OYSTER BAY

Inter-Departmental Memo

November 8, 2019

To: **MEMORANDUM DOCKET**

From: **STEVEN C. BALLAS, COMPTROLLER**

Subject: **AWARD OF OTHER POST EMPLOYMENT BENEFIT ACTUARIAL CONSULTANT SERVICES RFP**

SUPPLEMENTAL MEMO TO MD NOVEMBER 5, 2019, ITEM # 23

Pursuant to the Town of Oyster Bay Procurement Policy, the Office of the Comptroller requested Requests for Proposals (RFPs) from seven (7) firms for providing Other Post Employment Benefit Actuarial Consultant Services to the Town for a one-year period with an option, of extending the services to second and third year reporting periods, should it be mutually agreeable. In addition, the RFP was posted on the Town's website.

Of the seven (7) firms, however eight (8) firms responded by the October 21, 2019 response date. The evaluation and selection process was performed in compliance with the requirements of Guidelines 6 and 9 of the Town of Oyster Bay Procurement Policy. An RFP Review Committee was formed with six (6) employees from different departments within the Town. Each of the eight (8) responses were reviewed, evaluated and rated in detail by the RFP review committee pursuant to the Town of Oyster Bay Procurement Policy.

Of the eight (8) firms reviewed and evaluated, USI Consulting Group, 95 Glastonbury Boulevard, Suite 102, Glastonbury, CT 06033 was the highest ranked firm.

Accordingly, the Office of the Comptroller respectfully requests Town Board authorization for the Town to enter into an engagement with USI Consulting Group and further, authorize the Supervisor, his designee and/or the Comptroller to execute said engagement for the purpose of providing Other Post Employment Benefit Actuarial Consultant Services from December 1, 2019 through November 30, 2020, with the provision of two (2), one-year extension options, if mutually agreeable. The value of the accounting services for the one (1) year financial period engagement is to be $7,900.00 plus $1,000.00 for a report update if needed. Funds are available in account number CMP A 1315 44800 000 0000.

STEVEN C. BALLAS
COMPTROLLER

SCB/rpp

cc: Town Attorney (9)
Internal Audit Division (RFP file)
Reading File

Reviewed By
Office of Town Attorney

WHEREAS, Steven C. Ballas, Comptroller, by memorandum dated November 8, 2019, advised that pursuant to the Town of Oyster Bay Procurement Policy, the Office of the Comptroller issued a Request for Proposals (RFP) to twenty-six (26) firms, and placed said RFP on the Town's website, for Professional Auditing Services for the Town, for a one (1) year period with an option, at the discretion of the Town, to extend the services to second and third year reporting periods; and

WHEREAS, in response to that Request for Proposals, five (5) responses were timely received by the Office of the Comptroller; and

WHEREAS, following a review and evaluation of said five (5) responses by an RFP review committee consisting of six (6) employees from different departments within the Town, in accordance with the requirements of Guidelines 6 and 9 of the Town's Procurement Policy and based on the criteria set forth in the RFP, the office of the Comptroller recommended and requested that the Town Board authorize the Supervisor to enter into an agreement with Cullen and Danowski, LLP, 1650 Route 112, Port Jefferson Station, New York 11776 to provide Professional Auditing Services for the period commencing on December 1, 2019 and terminating on November 30, 2020, in an initial amount not to exceed $128,000.00, with two (2) annual extension options; and

WHEREAS, the Town Board deems it to be in the best interest of the Town to enter into such agreement,

RESOLVED, That the request as hereinabove set forth is hereby approved, and the Supervisor, his designee and/or the Comptroller is hereby authorized to execute any and all documents necessary to enter into an agreement with Cullen and Danowski, LLP, 1650 Route 112, Port Jefferson Station, New York 11776 for Professional Auditing Services, for the period commencing December 1, 2019 and terminating on November 30, 2020, in an amount not to exceed $128,000, with two (2) annual extension options, and that the Comptroller is hereby authorized and directed to make payment for same, upon presentation of a duly certified claim, after audit, and that the funds for said payment are to be drawn from Account No. TWN A 1989 44810 000 0000.

-#-

The foregoing resolution was declared adopted after a poll of the members of the Board; the vote being recorded as follows:

Supervisor Saladino	Aye
Councilman Muscarella	Aye
Councilman Macagnone	Aye
Councilwoman Johnson	Aye
Councilman Imbroto	Aye
Councilman Hand	Aye
Councilman Labriola	Aye

24

TOWN OF OYSTER BAY

Inter-Departmental Memo

November 1, 2019

To: **MEMORANDUM DOCKET**

From: **STEVEN C. BALLAS, COMPTROLLER**

Subject: **AWARD OF PROFESSIONAL AUDITING SERVICES RFP**

SUPPLEMENTAL MEMO TO FOLLOW

Additional information will be provided in a Supplemental Docket Memorandum to follow. Therefore, we recommend and request that a space be reserved at the next Town Board meeting on November 19, 2019.

STEVEN C. BALLAS
COMPTROLLER

SCB/cmw

cc: Town Attorney (9)
Reading File

22

TOWN OF OYSTER BAY

Inter-Departmental Memo

November 8, 2019

To: **MEMORANDUM DOCKET**

From: **STEVEN C. BALLAS, COMPTROLLER**

Subject: **AWARD OF PROFESSIONAL AUDITING SERVICES RFP**

SUPPLEMENTAL MEMO TO MD NOVEMBER 5, 2019, ITEM # 24

Pursuant to the Town of Oyster Bay Procurement Policy, the Office of the Comptroller requested Requests for Proposals (RFPs) from twenty-six (26) firms for providing Professional Auditing Services to the Town for a one-year period with an option, at the discretion of the Town, of extending the services to second and third year reporting periods. In addition, the RFP was posted on the Town's website.

Of the 26 firms, five (5) firms responded by the October 21, 2019 response date. The evaluation and selection process was performed in compliance with the requirements of Guidelines 6 and 9 of the Town of Oyster Bay Procurement Policy. An RFP Review Committee was formed with six (6) employees from different departments within the Town. Each of the five (5) responses were reviewed, evaluated and rated in detail by the RFP review committee pursuant to the Town of Oyster Bay Procurement Policy.

Of the five (5) firms reviewed and evaluated, Cullen and Danowski, LLP, 1650 Route 112 Port Jefferson Station, NY 11776 was the highest ranked firm. The firm submitted a cost proposal for a one (1) year financial period with options of extending said services to second and third year reporting periods, as requested, which were found to be both reasonable and acceptable.

Accordingly, the Office of the Comptroller respectfully requests Town Board authorization for the Town to enter into an engagement with Cullen and Danowski, LLP and further, authorize the Supervisor, his designee and/or the Comptroller to execute said engagement for the purpose of providing Professional Auditing Services from December 1, 2019 through November 30, 2020, with the provision of two (2), one-year extension options, if mutually agreeable. The value of the auditing services for the one (1) year financial period engagement is to be $128,000.00. Funds are available in account number TWN A 1989 44810 000 0000.

STEVEN C. BALLAS
COMPTROLLER

SCB/rpp

cc: Town Attorney (9)
Internal Audit Division (RFP file)
Reading File

Reviewed By Office of Town Attorney

WHEREAS, Steven C. Ballas, Comptroller, by memorandum dated November 8, 2019, advised that pursuant to the Town of Oyster Bay Procurement Policy, the Office of the Comptroller issued a Request for Proposals (RFP) to twenty-six (26) firms, placed said RFP on the Town's website, for On-Call Accounting Services for the Town, for a one (1) year period with an option, at the discretion of the Town, to extend the services to second and third year reporting periods; and

WHEREAS, in response to that Request for Proposals, three (3) responses were timely received by the Office of the Comptroller; and

WHEREAS, following a review and evaluation of said three (3) responses by an RFP review committee consisting of six (6) employees from different departments within the Town, in accordance with the requirements of Guidelines 6 and 9 of the Town's Procurement Policy and based on the criteria set forth in the RFP, the office of the Comptroller recommended and requested that the Town Board authorize the Supervisor to enter into an agreement with Albrecht, Viggiano, Zureck & Company, P.C., 25 Suffolk Court, Hauppauge, New York and Rynkar, Vail & Barrett, LLP, 22 Jericho Turnpike, Mineola, New York, to provide on-call accounting services for the period commencing on December 1, 2019 and terminating on November 30, 2020, in an initial amount not to exceed $850,000, with two (2) annual extension options; and

WHEREAS, the Town Board deems it to be in the best interest of the Town to enter into such agreement,

RESOLVED, That the request as hereinabove set forth is hereby approved, and the Supervisor, his designee and/or the Comptroller is hereby authorized to execute any and all documents necessary to enter into agreements with Albrecht, Viggiano, Zureck & Company, P.C., and Rynkar, Vail & Barrett, LLP, Mineola, New York for On-Call Accounting Services, for the period commencing December 1, 2019 and terminating on November 30, 2020, in an amount not to exceed $850,000, with two (2) annual extension options, and that the Comptroller is hereby authorized and directed to make payment for same, upon presentation of a duly certified claim, after audit, and that the funds for said payment are to be drawn from Account No. CMP A 1315 44800 000 0000.

-#-

The foregoing resolution was declared adopted after a poll of the members of the Board; the vote being recorded as follows:

Supervisor Saladino	Aye
Councilman Muscarella	Aye
Councilman Macagnone	Aye
Councilwoman Johnson	Aye
Councilman Imbroto	Aye
Councilman Hand	Aye
Councilman Labriola	Aye

25

TOWN OF OYSTER BAY

Inter-Departmental Memo

November 1, 2019

To: **MEMORANDUM DOCKET**

From: **STEVEN C. BALLAS, COMPTROLLER**

Subject: **AWARD OF ON-CALL ACCOUNTING SERVICES RFP**

SUPPLEMENTAL MEMO TO FOLLOW

Additional information will be provided in a Supplemental Docket Memorandum to follow. Therefore, we recommend and request that a space be reserved at the next Town Board meeting on November 19, 2019.

STEVEN C. BALLAS
COMPTROLLER

SCB/cmw

cc: Town Attorney (9)
Reading File

TOWN OF OYSTER BAY

Inter-Departmental Memo

November 8, 2019

To: **MEMORANDUM DOCKET**

From: **STEVEN C. BALLAS, COMPTROLLER**

Subject: **AWARD OF ON-CALL ACCOUNTING SERVICES RFP**

SUPPLEMENTAL MEMO TO MD NOVEMBER 5, 2019, ITEM # 25

Pursuant to the Town of Oyster Bay Procurement Policy, the Office of the Comptroller requested Requests for Proposals (RFPs) from twenty-six (26) firms for providing On-Call Accounting Services to the Town for a one year period with an option, at the discretion of the Town, of extending the services to second and third year reporting periods, should it be mutually agreeable. In addition, the RFP was posted on the Town's website.

Of the 26 firms, three (3) firms responded by the October 21, 2019 response date. The evaluation and selection process was performed in compliance with the requirements of Guidelines 6 and 9 of the Town of Oyster Bay Procurement Policy. An RFP Review Committee was formed with six (6) employees from different departments within the Town. Each of the three (3) responses were reviewed, evaluated and rated in detail by the RFP review committee pursuant to the Town of Oyster Bay Procurement Policy.

Of the three (3) firms reviewed and evaluated, Albrecht, Viggiano, Zureck & Co., 25 Suffolk Court, Hauppauge NY 11788 and Rynkar, Vail & Barrett LLP, 22 Jericho Turnpike, Mineola, NY 11501, were the highest ranked firms. The firms submitted cost proposals for one (1) year financial period with options of extending said services to second and third year reporting periods, as requested, which were found to be both reasonable and acceptable.

Accordingly, the Office of the Comptroller respectfully requests Town Board authorization for the Supervisor, his designee and/or the Comptroller to enter into a one (1) year financial period engagement, with option for two (2) one-year extensions, with Albrecht, Viggiano, Zureck & Co. and Rynkar, Vail & Barrett LLP for the purpose of providing On-Call Accounting Services from December 1, 2019 through November 30, 2020. The value of the accounting services for the one (1) year financial period engagement is not-to-exceed $850,000.00. Funds are available in account number CMP A 1315 44800 000 0000.

S Ballas

STEVEN C. BALLAS
COMPTROLLER

SCB/rpp

cc: Town Attorney (9)
Internal Audit Division (RFP file)
Reading File

Reviewed By
Office of Town Attorney

Meeting of November 19, 2019 Resolution No. 715-2019

WHEREAS, Sheila Tarnowski, Director, Legislative Affairs, by memorandum dated November 7, 2019, recommends adoption of the following Town Board Meeting Schedule for 2020:

2020 Meeting Schedule

January	7	10:00 a.m.
January	28	7:00 p.m.
February	11	10:00 a.m.
February	25	10:00 a.m.
March	10	10:00 a.m.
March	31	7:00 p.m.
April	21	10:00 a.m.
May	5	7:00 p.m.
May	19	10:00 a.m.
June	2	10:00 a.m.
June	16	7:00 p.m.
July	14	10:00 a.m.
August	18	10:00 a.m.
September	15	10:00 a.m.
October	6	10:00 a.m.
October	20	10:00 a.m. and 7:00 p.m.
October	27	10:00 a.m.
November	17	10:00 a.m.
December	8	10:00 a.m.

NOW, THEREFORE, BE IT RESOLVED, That the recommendation as hereinabove set forth is accepted, and the abovementioned Town Board Meeting Schedule for 2020 is hereby adopted.

-#-

The foregoing resolution was declared adopted after a poll of the members of the Board; the vote being recorded as follows:

Supervisor Saladino	Aye
Councilman Muscarella	Aye
Councilman Macagnone	Aye
Councilwoman Johnson	Aye
Councilman Imbroto	Aye
Councilman Hand	Aye
Councilman Labriola	Aye

TOWN OF OYSTER BAY

INTER-DEPARTMENTAL MEMORANDUM

November 1, 2019

TO: **Memorandum Docket**

FROM: **Sheila Tarnowski, Legislative Affairs**
THRU: **Joseph Nocella, Town Attorney**

SUBJECT: **Proposed Town Board Meeting Dates for 2020**

Additional information will be provided in a Supplemental Memo to follow. Therefore, we recommend and request that a space be reserved at the Town Board meeting on November 19, 2019.

Joseph Nocella
Town Attorney

Sheila Tarnowski

Sheila Tarnowski
Legislative Affairs

JN:ST

Cc: Town Attorney (w/9 copies)

24

TOWN OF OYSTER BAY
INTER-DEPARTMENTAL MEMO

November 7, 2019

TO: MEMORANDUM DOCKET

FROM: SHEILA TARNOWSKI, DIRECTOR, LEGISLATIVE AFFAIRS
THRU: OFFICE OF THE TOWN ATTORNEY

SUBJECT: PROPOSED TOWN BOARD MEETING DATES – 2020
SUPPLEMENTAL MEMO TO MD 11/5/19 #26

The following are the proposed Town Board Meeting dates for 2020.

January 7	10:00 am
January 28	7:00 pm
February 11	10:00 am
February 25	10:00 am
March 10	10:00 am
March 31	7:00 pm
April 21	10:00 am
May 5	7:00 pm
May 19	10:00 am
June 2	10:00 am
June 16	7:00 pm
July 14	10:00 am
August 18	10:00 am
September 15	10:00 am
October 6	10:00 am
October 20	10:00 am & 7:00 pm (Budget Hearings)
October 27	10:00 am
November 17	10:00 am
December 8	10:00 am

I respectfully request Town Board approval to set these dates for the 2020 Town Board Meeting Schedule.

JOSEPH NOCELLA
TOWN ATTORNEY

Sheila Tarnowski
SHEILA TARNOWSKI
DIRECTOR, LEGISLATIVE AFFAIRS

CC: Town Attorney (+ 9 copies)

Reviewed By
Office of Town Attorney

WHEREAS, Joseph Nocella, Town Attorney, and Samantha A. Goetz, Assistant Town Attorney, by memoranda dated November 4, 2019 and November 12, 2019, advised that the Town is engaged in a personal injury litigation captioned *Serpe v. Town of Oyster Bay, et al.*, which involves several co-Defendants; and

WHEREAS, the Plaintiff was required to appear for independent medical examinations to assess the nature and extent of the claimed injuries, which examination was conducted through a shared physician, Dr. Barry C. Cooper, DDS, at a total cost of $1,450.00 with the Town's share being $725.00; and

WHEREAS, Joseph Nocella, Town Attorney, and Samantha A. Goetz, Assistant Town Attorney, by the aforementioned memoranda, requested that the Town Board ratify the actions of the Office of the Town Attorney in utilizing the services of Dr. Cooper for the purpose of conducting Plaintiff's IME and authorize payment for the Town's share of $725.00,

NOW, THEREFORE, BE IT RESOLVED, That the recommendation and request hereinabove set forth is accepted and approved, and the Town Board hereby ratifies the actions of the Office of the Town Attorney in utilizing Dr. Barry C. Cooper, DDS, PC, 100 Harrison Street, Lawrence, New York 11559 for the purpose of Plaintiff's dental IME; and be it further

RESOLVED, That the Comptroller is hereby authorized and directed to pay to make payment for same, in an amount not to exceed $725.00, upon the submission of a duly certified claim, after approval by the Town Attorney, and after audit, with funds to be drawn from Account No. OTA A 1420 44110 000 0000.

-#-

The foregoing resolution was declared adopted after a poll of the members of the Board; the vote being recorded as follows:

Supervisor Saladino	Aye
Councilman Muscarella	Aye
Councilman Macagnone	Aye
Councilwoman Johnson	Aye
Councilman Imbroto	Aye
Councilman Hand	Aye
Councilman Labriola	Aye

Town of Oyster Bay
Inter-Departmental Memo

TO: Memorandum Docket

FROM: Office of the Town Attorney

DATE : November 12, 2019

SUBJECT: Independent Medical Examination
Shared Cost with Co-Defendant
Supplemental to M.D. No. 27 (November 5, 2019)

The Town is engaged in a personal injury litigation captioned *Serpe v. Town of Oyster Bay, et al.,* which involves several co-Defendants. As is custom, the Plaintiff was required to appear for independent medical examinations ("IME") to assess the nature and extent of the claimed injuries. In this case, for strategic reasons, the co-Defendants found it more efficient to pursue the IME through a shared physician.

On July 8, 2019, Dr. Barry C. Cooper conducted the Plaintiff's IME at the request of co-Defendant Round Swamp Properties, Inc. The total bill for the examination is $1,450.00, with the Town's share of $725.00 to be paid directly to Dr. Cooper's practice.

Request is hereby made to ratify the actions of the Office of the Town Attorney in sharing costs with co-Defendant for Dr. Barry C. Cooper, DDS, PC, 100 Harrison Street, Lawrence, New York 11559 for the purpose of a dental IME and to authorize payment for same. Further, given the circumstances raised herein, the Office of the Town Attorney finds that a waiver of the Procurement Policy is warranted.

Funds are available from Account No. OTA A 1420 44110 000 0000.

JOSEPH NOCELLA
TOWN ATTORNEY

Samantha A. Goetz

Samantha A. Goetz
Assistant Town Attorney

SAG:sag
Enclosures
2018-6443
Town Attorney (with 9 Copies)

S:\Attorney\RESOS 2019\MD & RESO\Serpe IME Shared Cost.docx

27

Town of Oyster Bay
Inter-Departmental Memo

TO: MEMORANDUM DOCKET

FROM: Office of the Town Attorney

DATE: November 4, 2019

SUBJECT: Independent Medical Examination payment for Dr. Barry Cooper in relation to Serpe v. Town of Oyster Bay et al.

Please reserve a space on the Town Board calendar of November 19, 2019 with respect to the above-referenced matter. Supplemental memorandum to follow.

JOSEPH NOCELLA
TOWN ATTORNEY

Samantha A. Goetz
Assistant Town Attorney

SAG/sag
2018-6443
cc: Town Attorney (w/9 copies)

S:\Attorney\RESOS 2019\MD & RESO\MD Save a space Dr. Cooper Serpemattersg 11.4.19.docx

WHEREAS, by Resolution No. 867-2017, adopted on December 12, 2017, the Town Board authorized the Department of Public Works to enter into an agreement with Lockwood, Kessler & Bartlett, Inc. to provide technical services in connection with Contract No. PWC31-18, Operation and development of the Old Bethpage Solid Waste Disposal Complex, for a two (2) year period, from January 1, 2018 through December 31, 2019; and

WHEREAS, Paul Lappano, P.E., Vice President of Environmental Services, Lockwood, Kessler & Bartlett, Inc., by letter dated October 3, 2019, described the scope of work to be performed under Contract No. PWC31-18, which included research and preparation of the Request for Proposals for the transfer and disposal of the Town's municipal solid waste, for an amount not to exceed $40.00000; and

WHEREAS, Richard W. Lenz, P.E., Commissioner, Department of Public Works/Highways, by memoranda dated November 1, 2019, and November 7, 2019, requested Town Board authorization for Lockwood, Kessler & Bartlett, Inc. to provide the aforesaid engineering services under Contract No. PWC31-18, and further requested that the Comptroller be directed to issue an encumbrance order in an amount not to exceed $40,000.00 for this purpose; and

WHEREAS, funds in the amount of $40,000.00 to satisfy said engineering costs are available in Account No. DER SR05 8160 44800 000 0000,

NOW, THEREFORE, BE IT RESOLVED, that the requests as hereinabove set forth are accepted and approved, and Lockwood, Kessler & Bartlett, Inc. is hereby authorized to provide the aforementioned services in connection with Contract No. PWC31-18, Operation and Development of the Old Bethpage Solid Waste Disposal Complex, and be it further

RESOLVED, that the Comptroller is hereby authorized and directed to make payment for same in an amount not to exceed $40,000.00 upon presentation of a duly certified claim, after audit, with the funds for said payment to be drawn from Account No. DER SR05 8160 44800 000 0000.

-#-

Reviewed By
Office of Town Attorney

The foregoing resolution was declared adopted after a poll of the members of the Board; the vote being recorded as follows:

Supervisor Saladino	Aye
Councilman Muscarella	Aye
Councilman Macagnone	Aye
Councilwoman Johnson	Aye
Councilman Imbroto	Aye
Councilman Hand	Aye
Councilman Labriola	Aye

TOWN OF OYSTER BAY

INTER-DEPARTMENTAL MEMO

NOVEMBER 1, 2019

TO: MEMORANDUM DOCKET

FROM: RICHARD W. LENZ, P.E., COMMISSIONER
DEPARTMENT OF PUBLIC WORKS/HIGHWAY

SUBJECT: ON-CALL ENGINEERING SERVICE REQUEST
OPERATION AND DEVELOPMENT OF THE
OLD BETHPAGE SOLID WASTE DISPOSAL COMPLEX
CONTRACT NO. PWC31-18
SUPPLEMENTAL MEMO TO FOLLOW

The Division of Engineering is compiling the necessary paperwork for an on-call consultant service request authorization Lockwood, Kessler & Bartlett, Inc. for services under On-Call Engineering Services Relative to Operation and Development of the O.B.S.W.D.C, Contract No. PWC31-18. Additional information will be provided by supplemental docket memo.

It is hereby requested that a space be reserved at the Town Board meeting of November 19, 2019 for the Town Board to act on a request for authorization under Contract No. PWC31-18, On-Call Engineering Services Relative to Operation and Development of the O.B.S.W.D.C.

RICHARD W. LENZ, P.E.
COMMISSIONER
DEPARTMENT OF PUBLIC WORKS/HIGHWAY

RWL/JCT/MR/mr

Attachment

c: Office of the Town Attorney (w/9 copies)
Steven Ballas, Comptroller
George Baptista, Deputy Commissioner/Environmental Resources
Kathy Stefanich, Administrative Division/DPW

PWC31-18 LKB DOCKET SWTF FUNDS RESERVE

28

TOWN OF OYSTER BAY

INTER-DEPARTMENTAL MEMO

NOVEMBER 7, 2019

TO : MEMORANDUM DOCKET

FROM : RICHARD W. LENZ, P.E., COMMISSIONER
DEPARTMENT OF PUBLIC WORKS/HIGHWAY

SUBJECT : SUPPLEMENTAL DOCKET MEMO TO ITEM NO. 31
DOCKET OF NOVEMBER 5, 2019
ON-CALL CONSULTANT SERVICE REQUEST
CONTRACT NO. PWC31-18
OPERATION AND DEVELOPMENT OF THE OLD BETHPAGE
SOLID WASTE DISPOSAL COMPLEX
ACCOUNT NO.: DER SR05 8160 44800 000 0000

In furtherance to Item No. 31 of the docket of November 5, 2019, the consultant, Lockwood, Kessler & Bartlett, Inc., has been approved by the Commissioner of Public Works to provide technical services under On-Call Contract No. PWC31-18 by Resolution No. 867-2017for the subject project. Funds have been made available by the Director of Finance.

Attached is a letter dated October 3, 2019 from Lockwood, Kessler & Bartlett, Inc., regarding the scope of work to be performed in an amount not to exceed $40,000.00. Services to be provided include research and preparation of the Request for Proposals (RFP) for the transfer and disposal of the Town's municipal solid waste.

Attached is an availability of funds in the amount of $40,000.00 to satisfy said engineering costs from the Office of the Director of Finance indicating that funds are available in Account No. DER SR05 8160 44800 000 0000.

It is hereby requested that the Town Board authorize, by Resolution, Lockwood, Kessler & Bartlett, Inc. under Contract No. PWC31-18, On-Call Technical Assistance Relative to Operation and Development of the Old Bethpage Solid Waste Disposal Complex, and requests that the Comptroller be directed to issue an encumbrance order for this purpose.

RICHARD W. LENZ, P.E.
COMMISSIONER
DEPARTMENT OF PUBLIC WORKS/HIGHWAY

RWL/JCT/MR/lk

Attachment

cc: Office of the Town Attorney (w/9 copies)
Steven Ballas, Comptroller
George Baptista, Deputy Commissioner/Environmental Resources
Kathy Stefanich, Administrative Division/DPW

PWC31-18 LKB DOCKET RFP FUNDS SUPP

ON-CALL CONSULTANT SERVICE / REQUIREMENTS CONTRACT
REQUEST FOR AVAILABILITY OF FUNDS

Requesting Division/Department ENVIRONMENTAL RESOURCES

THIS SECTION TO BE COMPLETED BY DEPARTMENT ADMINISTERING ON-CALL CONSULTANT CONTRACT

Contract Number PWC31-18

Contract Period JANUARY 1, 2018 - DECEMBER 31, 2019

Consultant/Contractor LOCKWOOD, KESSLER & BARTLETT, INC.

Discipline OPERATION AND DEVELOPMENT OF THE O.B.S.W.D.C.

Total Authorization $87,000.00

Resolution No. 867-2017 Date 12/12/2017

Funded To Date $47,000.00

Amount Requested $40,000.00

Account To Be Used DER SR05 8160 44800 000 0000

If Capital Account, State The Related Contract Number:

Description Of Work

If a Capital Account is used and work is not related to a Capital Project, specify the nature of the requested service that qualifies it as a Capital Expense.

SERVICES FOR THE DEVELOPMENT OF RFP/BID DOCUMENTS FOR TRANSFER, HAUL & DISPOSAL OF MSW

Work To Be Completed In Contract Period: *Yes* [X] *No* [ ]

A "No" response will require Town Board authorization to extend the contract period.

Required Insurances Are In Effect: *Yes* [X] *No* [ ]

A "No" response will prevent further processing of this form.

Required 50% Performance Bond For This Request In Effect: *Yes* [ ] *No* [ ] *N/A* [X]

Amount of Bond $

Requesting Division/Department	DPW Approval Only To Be Executed By The Commissioner
Signature	Signature
Title DEPUTY COMMISSIONER	Title **Commissioner of Public Works**
Date Nov 4, 2019	Date 11-6-19

THIS SECTION TO BE COMPLETED BY THE DIRECTOR OF FINANCE

Amount Requested 38,000.00

Unemcumbered Balance 187,150.11

Is The Account To Be Used Consistent With The Nature Of Work Listed Above? *Yes* [X] *No* [ ]

Signature Date 11/7/19

TOWN OF OYSTER BAY

WORK ORDER

This Section To Be Completed By The Department Of Public Works

Work Order No. _____ E.O. No. _____

Contract Start 1/1/2018

Contract No. PWC31-18 Contract End 12/31/2019

Commencement Date 1/1/2019

No claim shall be paid for work performed prior to the Commencement Date

Vendor Name and Address

LOCKWOOD, KESSLER & BARTLETT

1 AERIAL WAY

SYOSSET, NEW YORK 11791

Requesting Town Department ENVIRONMENTAL RESOURCES

Contact MATTHEW RUSSO, P.E. Phone 516-677-5719

Description of Work to be Performed (Attach Detail If Necessary)

SERVICES FOR THE DEVELOPMENT OF RFP/BID

DOCUMENTS FOR TRANSFER, HAUL & DISPOSAL OF MSW

This work order shall not exceed $ 40,000.00

Please notify the above mentioned contact person 48 hours prior to commencing any work.

Requesting Division/Department

Signature

Title DEPUTY COMMISSIONER

Date Nov 4, 2019

Department Of Public Works Approval

Only To Be Executed By The Commissioner

Signature

Commissioner of Public Works

Date 11-6-19

LKB CONSULTING ENGINEERS
ENGINEERING EXCELLENCE SINCE 1959

Lockwood, Kessler & Bartlett, Inc.
One Aerial Way · Syosset, NY 11791
516.938.0600 www.lkbinc.com

October 3, 2019
LKB # 2017-0126

Richard Lenz, PE
Commissioner
Town of Oyster Bay Department of Public Works
150 Miller Place
Syosset, NY 11791

Attn: John Tassone, Deputy Commissioner

Re: Contract No. PWC 31-18, On-Call Technical Assistance with the Development and Operation of the Town's Old Bethpage Solid Waste Disposal Complex (OBSWDC)

Dear Commissioner Lenz,

Lockwood Kessler and Bartlett, Inc. (LKB) was authorized under Town Board Resolution 867-2017, dated December 12, 2017, to provide services for the Operation and Development of the OBSWDC for the two- year period from January 1, 2018 through December 31, 2019. At the meeting on September 5, 2019, the Town informed LKB that services under Contract No. PWC 31-18 may include addition work for the Solid Waste Planning Task Force. For the remainder of 2019 this work includes providing assistance to developing the Draft Solid Waste RFP.

Therefore, LKB respectfully requests that $40,000 be appropriated for Contract No. PWC 31–18 to perform this service in 2019.

We appreciate the opportunity to serve the Town on this project. Should you have any questions regarding this letter please contact our office.

Very truly yours,
LOCKWOOD, KESSLER & BARTLETT, INC.

Paul Lappano, PE, BCEE, LEED AP
Vice President of Environmental Services

CC M Russo PE

Meeting of December 12, 2017 Resolution No. 867-2017

Reviewed By
Office of Town Attorney

WHEREAS, Richard W. Lenz, P.E., Commissioner, Department of Public Works, by memoranda dated November 27, 2017 and December 4, 2017, advised that the Department of Public Works issued a Request for Proposal to firms seeking to provide On-Call Engineering Services to the Town relative to Operation and Development of the Old Bethpage Solid Waste Disposal Complex, resulting in the receipt of three (3) submissions, and after review and analysis of the submissions based upon the technical merits of the responses has selected Cashin Associates, P.C., D&B Engineering & Architects, and Lockwood, Kessler & Bartlett, Inc., to perform On-Call Engineering Services in connection with Contract No. PWC31-18, for a two (2) year contract, from January 1, 2018 through December 31, 2019; and

NOW, THEREFORE, BE IT RESOLVED, That the request as hereinabove set forth is hereby accepted and approved and in connection with Contract No. PWC31-18, Cashin Associates, P.C., D&B Engineering & Architects, and Lockwood, Kessler & Bartlett, Inc., are hereby authorized and directed to provide On-Call Engineering Services to the Town, relative to relative to Operation and Development of the Old Bethpage Solid Waste Disposal Complex, in connection with Contract No. PWC31-18, for a two (2) year contract, from January 1, 2018 through December 31, 2019.

#

The foregoing resolution was declared adopted after a poll of the members of the Board; the vote being recorded as follows:

Supervisor Saladino	Aye
Councilman Muscarella	Aye
Councilman Macagnone	Aye
Councilwoman Alesia	Absent
Councilwoman Johnson	Aye
Councilman Imbroto	Absent
Councilman Hand	Aye

cc: Supervisor (2)
Town Attorney
Comptroller
Public Works

WHEREAS, by Resolution No. 867-2017, adopted on December 12, 2017, the Town Board authorized the Department of Public Works to enter into an agreement with Cashin Associates, P.C., to provide technical services in connection with Contract No. PWC31-18, Operation and development of the Old Bethpage Solid Waste Disposal Complex, for a two (2) year period, from January 1, 2018 through December 31, 2019; and

WHEREAS, Alfred J. Angiola, P.E., President, Cashin Associates, P.C., by letter dated September 20, 2019, described the scope of work to be performed under Contract No. PWC31-18, which includes assistance with site operations, solid waste planning services, regulatory assistance, and research and preparation of the Request for Proposals for the transfer and disposal of the Town's municipal solid waste, for an amount not to exceed $105,125.00; and; and

Reviewed By
Office of Town Attorney

WHEREAS, Richard W. Lenz, P.E., Commissioner, Department of Public Works/Highways, by memoranda dated November 1, 2019 and November 7, 2019, requested Town Board authorization for Cashin Associates, P.C. to provide the aforesaid engineering services under Contract No. PWC31-18, and further requested that the Comptroller be directed to issue an encumbrance order in an amount not to exceed $105,125.00 for this purpose; and

WHEREAS, Commissioner Lenz requested authorization for Cashin Associates, P.C. to utilize Germano and Cahill, P.C. for legal assistance with solid waste issues; and

WHEREAS, funds in the amount of $105,125.00 to satisfy said engineering costs are available in Account No. DER SR05 8160 44800 000 0000,

NOW, THEREFORE, BE IT RESOLVED, that the requests as hereinabove set forth are accepted and approved, and Cashin Associates, P.C. is hereby authorized to provide the aforementioned services in connection with Contract No. PWC31-18, Operation and Development of the Old Bethpage Solid Waste Disposal Complex, and be it further

RESOLVED, that Cashin Associates, P.C. is authorized to use the services of Germano and Cahill, P.C. for legal services in connection with solid waste issues, and be it further

RESOLVED, that the Comptroller is hereby authorized and directed to make payment for same upon presentation of a duly certified claim, after audit, with the funds for said payment to be drawn from Account DER SR05 8160 44800 000 0000.

-#-

The foregoing resolution was declared adopted after a poll of the members of the Board; the vote being recorded as follows:

Supervisor Saladino	Aye
Councilman Muscarella	Aye
Councilman Macagnone	Aye
Councilwoman Johnson	Aye
Councilman Imbroto	Aye
Councilman Hand	Aye
Councilman Labriola	Aye

32

TOWN OF OYSTER BAY

INTER-DEPARTMENTAL MEMO

NOVEMBER 1, 2019

TO: MEMORANDUM DOCKET

FROM: RICHARD W. LENZ, P.E., COMMISSIONER
DEPARTMENT OF PUBLIC WORKS/HIGHWAY

SUBJECT: ON-CALL ENGINEERING SERVICE REQUEST AND USE OF SUB-CONSULTANT
OPERATION AND DEVELOPMENT OF THE
OLD BETHPAGE SOLID WASTE DISPOSAL COMPLEX
CONTRACT NO. PWC31-18
SUPPLEMENTAL MEMO TO FOLLOW

The Division of Engineering is compiling the necessary paperwork for an on-call consultant service request authorization Cashin Associates, P.C. for services under On-Call Engineering Services Relative to Operation and Development of the O.B.S.W.D.C, Contract No. PWC31-18, in addition to the use of sub-consultant services. Additional information will be provided by supplemental docket memo.

It is hereby requested that a space be reserved at the Town Board meeting of November 19, 2019 for the Town Board to act on a request for authorization and use of sub-consultant services under Contract No. PWC31-18, On-Call Engineering Services Relative to Operation and Development of the O.B.S.W.D.C.

RICHARD W. LENZ, P.E.
COMMISSIONER
DEPARTMENT OF PUBLIC WORKS/HIGHWAY

RWL/JCT/MR/mr

Attachment

c: Office of the Town Attorney (w/9 copies)
Steven Ballas, Comptroller
George Baptista, Deputy Commissioner/Environmental Resources
Kathy Stefanich, Administrative Division/DPW

PWC31-18 CASHIN DOCKET SWTF FUNDS RESERVE

26

TOWN OF OYSTER BAY
INTER-DEPARTMENTAL MEMO

NOVEMBER 7, 2019

TO : MEMORANDUM DOCKET

FROM : RICHARD W. LENZ, P.E., COMMISSIONER
DEPARTMENT OF PUBLIC WORKS/HIGHWAY

SUBJECT : SUPPLEMENTAL DOCKET MEMO TO ITEM NO. 32
DOCKET OF NOVEMBER 5, 2019
ON-CALL CONSULTANT SERVICE REQUEST AND USE OF SUB-CONSULTANT
CONTRACT NO. PWC31-18
OPERATION AND DEVELOPMENT OF THE OLD BETHPAGE
SOLID WASTE DISPOSAL COMPLEX
ACCOUNT NO.: DER SR05 8160 44800 000 0000

In furtherance to Item No. 32 of the docket of November 5, 2019, the consultant, Cashin Associates, P.C., has been approved by the Commissioner of Public Works to provide technical services under On-Call Contract No. PWC31-18 by Resolution No. 867-2017for the subject project. Funds have been made available by the Director of Finance.

Attached is a letter dated September 20, 2019 from Cashin Associates, P.C., regarding the scope of work to be performed in an amount not to exceed $105,125.00. Services to be provided include assistance with site operations, solid waste planning services, regulatory assistance, and research and preparation of the Request for Proposals (RFP) for the transfer and disposal of the Town's municipal solid waste.

Attached is an availability of funds in the amount of $105,125.00 to satisfy said engineering costs from the Office of the Director of Finance indicating that funds are available in Account No. DER SR05 8160 44800 000 0000.

Further, the office of Cashin Associates, P.C. requests the use of Germano & Cahill, P.C. for legal assistance with solid waste issues, relative to the development of the solid waste RFP. The necessary disclosure Forms have been submitted.

It is hereby requested that the Town Board authorize, by Resolution, Cashin Associates, P.C. under Contract No. PWC31-18, On-Call Technical Assistance Relative to Operation and Development of the Old Bethpage Solid Waste Disposal Complex, and requests that the Comptroller be directed to issue an encumbrance order for this purpose, and the German & Cahill, P.C. be authorized as a sub-consultant.

RICHARD W. LENZ, P.E.
COMMISSIONER
DEPARTMENT OF PUBLIC WORKS/HIGHWAY

RWL/JCT/MR/lk
Attachment
cc: Office of the Town Attorney (w/9 copies)
Steven Ballas, Comptroller
George Baptista, Deputy Commissioner/Environmental Resources
Kathy Stefanich, Administrative Division/DPW

PWC31-18 CA DOCKET RFP FUNDS SUPP

ON-CALL CONSULTANT SERVICE / REQUIREMENTS CONTRACT
REQUEST FOR AVAILABILITY OF FUNDS

Requesting Division/Department ENVIRONMENTAL RESOURCES

THIS SECTION TO BE COMPLETED BY DEPARTMENT ADMINISTERING ON-CALL CONSULTANT CONTRACT

Contract Number PWC31-18

Contract Period JANUARY 1, 2018 - DECEMBER 31, 2019

Consultant/Contractor CASHIN ASSOCIATES, P.C.

Discipline OPERATION AND DEVELOPMENT OF THE O.B.S.W.D.C.

Total Authorization $424,125.00

Resolution No. 867-2017 Date 12/12/2017

Funded To Date $319,000.00

Amount Requested $105,125.00

Account To Be Used DER 5205 8160 44800 000 0000

If Capital Account, State The Related Contract Number:

Description Of Work

If a Capital Account is used and work is not related to a Capital Project, specify the nature of the requested service that qualifies it as a Capital Expense.

SERVICES FOR SOLID WASTE PLANNING ISSUES AND THE DEVELOPMENT OF RFP/BID DOCUMENTS FOR TRANSFER, HAUL & DISPOSAL OF MSW

Work To Be Completed In Contract Period: *Yes* [X] *No* [ ]

A "No" response will require Town Board authorization to extend the contract period.

Required Insurances Are In Effect: *Yes* [X] *No* [ ]

A "No" response will prevent further processing of this form.

Required 50% Performance Bond For This Request In Effect: *Yes* [ ] *No* [ ] *N/A* [X]

Amount of Bond $

Requesting Division/Department	DPW Approval Only To Be Executed By The Commissioner
Signature	Signature
Title DEPUTY COMMISSIONER	Title **Commissioner of Public Works**
Date Nov 4, 2019	Date 11-6-19

THIS SECTION TO BE COMPLETED BY THE DIRECTOR OF FINANCE

Amount Requested 105,125.00

Unemcumbered Balance 187,150.17

Is The Account To Be Used Consistent With The Nature Of Work Listed Above? *Yes* [ ] *No* [ ]

Signature Date 11/7/19

TOWN OF OYSTER BAY

WORK ORDER

This Section To Be Completed By The Department Of Public Works

Work Order No. _____ E.O. No. _____

Contract Start 1/1/2018

Contract No. PWC31-18 Contract End 12/31/2019

Commencement Date 1/1/2019

No claim shall be paid for work performed prior to the Commencement Date

Vendor Name and Address

CASHIN ASSOCIATES, P.C.

1200 VETERANS MEMORIAL HIGHWAY

HAUPPAUGE, NEW YORK 11788

Requesting Town Department ENVIRONMENTAL RESOURCES

Contact MATTHEW RUSSO, P.E. Phone 516-677-5719

Description of Work to be Performed (Attach Detail If Necessary)

SERVICES FOR SOLID WASTE PLANNING ISSUES AND

SERVICES FOR SOLID WASTE PLANNING ISSUES AND THE DEVELOPMENT

OF RFP/BID DOCUMENTS FOR TRANSFER, HAUL & DISPOSAL OF MSW

This work order shall not exceed $ 105,125.00

Please notify the above mentioned contact person 48 hours prior to commencing any work.

Requesting Division/Department

Signature

Title DEPUTY COMMISSIONER

Date Nov 4, 2019

Department Of Public Works Approval

Only To Be Executed By The Commissioner

Signature

Commissioner of Public Works

Date 11-6-19

Cashin Associates, P.C.
ENGINEERING • PLANNING • CONSTRUCTION MANAGEMENT
Est. 1959

September 20, 2019

Richard Lenz, P.E.
Commissioner
Department of Public Works
Town of Oyster Bay
150 Miller Place
Syosset, NY 11791-5699

Attention: Matt Russo, P.E.

Re: Contract PWC 31-18 - - On-Call Engineering Services Relative to Operation and Development of the Old Bethpage Solid Waste Disposal Complex

Dear Commissioner Lenz:

Pursuant to our recent conversation, Cashin Associates, P.C. (CA) is pleased to present for your approval this fee proposal for continuing our ongoing services during 2019 under the captioned agreement. Thus far in 2019, CA has performed the following tasks:

- Evaluated and recommended the Apex landfill as a disposal site for MSW
- Submitted a DEC TAGM analysis for glass recycling
- Assayed street sweepings for volume and trace contaminants
- Finalized the Town SWMP
- Revised the Part 360 Permit Engineering Report
- Attended OBSWDC operations meetings
- Tested the environmental conditions at the M-Pire site at the OBSWDC
- Prepared annual reports for submittal to DEC

Referencing the attached copy of CA's December 3, 2018 proposal which detailed the then anticipated tasks for 2019, as authorized by Town Board Resolution 867-2017, CA offers to perform the following tasks in 2019:

Task Group 1 – Coordination of the MSW Transfer/Haul/Disposal Contract

These three tasks, including the approval of a new disposal landfill as recently requested by Winters Bros. Recycling, are ongoing and will continue through the remainder of this calendar year.

1200 Veterans Memorial Highway • Hauppauge, NY 11788 • (631) 348-7600 • FAX (631) 348-7601
www.cashinassociates.com

Task Group 2 – Coordination of Recycling Contracts

Bullet points 2, 3, 4, and 7 are ongoing and require additional funding. As discussed at our recent meetings, CA recommends commencement of a 120-w procurement for solid waste, including recyclables, disposal beyond the termination dates of the current contracts.

Task Group 3 – Reports and Correspondence to DEC

The annual reports (Tasks 1 & 2) have been prepared and submitted to DEC. Throughout 2019, CA has prepared a number of updates for submittal to DEC, including an update to the Part 360 Engineering Report. These tasks (3 & 4) are ongoing and also will require additional funding.

Task Group 4 – Oversight of the OBSWDC

CA has completed an environmental audit of the M-Pire site and is prepared to audit the remaining tenant occupied sites when authorized (see CA's April 19, 2018 proposal for this task).

Task Group 5 – Implementation of SWMP Planning Components

Per DEC guidelines, the Town is required to hold a public comment period on the draft SWMP, including one public meeting, to receive comments. CA will assist the Town in this endeavor. In addition, tasks under this group relate to commitments made by the Town to stay in compliance with the SWMP. Some of these items need to be addressed in 2019.

Task Group 6 – Miscellaneous Services

These two tasks, which include the disposition of street sweepings at Miller Place and tenant related issues at the OBSWDC, are ongoing and require additional funding.

CA proposes to perform the scope of services described herein and in more detail in the December 3, 2018 proposal under Contract No. DPW 31-18 as authorized by Town Board Resolution 867-2017. In addition, CA hereby proposes to utilize the services of Germano & Cahill, P.C. as a subconsultant. G & C's knowledge and experience with legislative solid waste issues on Long Island, including existing and proposed statutes and waste flow control findings, will provide a valuable perspective to the Solid Waste Task Force as it develops a new 120-w RFP for MSW/recyclables disposal. Their proposal is attached.

We respectfully request that the Town authorize a sum of $105,125.00 for continuation of our services. A breakdown of this total by task grouping is provided in the attached table.

As always, we appreciate this opportunity to continue our solid waste consulting services to the Town of Oyster Bay. Please let me know if you have any questions or desire additional information.

Respectfully submitted,
CASHIN ASSOCIATES, P.C.

Alfred J. Angiola, P.E.
President

AJA/ck
Enclosure

i:\ck\lin\alfred - 2019\oobay revised fee proposal pwc 31-18 on-call engineering - 9-20-19.docx

Fee Proposal for CY 2019 Engineering Services
Operation and Development of the OBSWDC
Contract PWC 31-18

Task Group	Hourly Billing Rate *	Hours	Task Fee
1	$175. $125.	60 20	$13,000
2	$175. $125.	120 40	$26,000
3	$175. $125.	40 20	$ 9,500
4	$175. $125.	65 40	$16,375
5	$175. $125.	30 60	$12,750
6	$175. $125.	50 20	$11,250

CA Fee:	$ 88,875.00
G & C Fee:	$ 16,250.00
Total Fee:	**$105,125.00**

* Principals' billing rate is $175./hour
Engineers'/Planners' billing rate is $125./hour

Meeting of December 12, 2017 Resolution No. 867-2017

Reviewed By
Office of Town Attorney

WHEREAS, Richard W. Lenz, P.E., Commissioner, Department of Public Works, by memoranda dated November 27, 2017 and December 4, 2017, advised that the Department of Public Works issued a Request for Proposal to firms seeking to provide On-Call Engineering Services to the Town relative to Operation and Development of the Old Bethpage Solid Waste Disposal Complex, resulting in the receipt of three (3) submissions, and after review and analysis of the submissions based upon the technical merits of the responses has selected Cashin Associates, P.C., D&B Engineering & Architects, and Lockwood, Kessler & Bartlett, Inc., to perform On-Call Engineering Services in connection with Contract No. PWC31-18, for a two (2) year contract, from January 1, 2018 through December 31, 2019; and

NOW, THEREFORE, BE IT RESOLVED, That the request as hereinabove set forth is hereby accepted and approved and in connection with Contract No. PWC31-18, Cashin Associates, P.C., D&B Engineering & Architects, and Lockwood, Kessler & Bartlett, Inc., are hereby authorized and directed to provide On-Call Engineering Services to the Town, relative to relative to Operation and Development of the Old Bethpage Solid Waste Disposal Complex, in connection with Contract No. PWC31-18, for a two (2) year contract, from January 1, 2018 through December 31, 2019.

#

The foregoing resolution was declared adopted after a poll of the members of the Board; the vote being recorded as follows:

Supervisor Saladino	Aye
Councilman Muscarella	Aye
Councilman Macagnone	Aye
Councilwoman Alesia	Absent
Councilwoman Johnson	Aye
Councilman Imbroto	Absent
Councilman Hand	Aye

cc: Supervisor (2)
Town Attorney
Comptroller
Public Works

Reviewed By
Office of Town Attorney

WHEREAS, Resolution No. 852-2017, adopted on December 12, 2017, authorized LiRo Engineers, Inc., to proceed with engineering services in connection with Contract No. DPW17-167, Engineering Services relative to the Design, Bid and Construction Phases for the Expansion of Ellsworth W. Allen Town Park, Town of Oyster Bay, Nassau County, New York; and

WHEREAS, the original scope of the project included construction of all work as a single contract, however, during the design phase, considering the amount of necessary work, and availability of funding, the project was divided into two phases, pursuant to Resolution 293-2019 adopted on May 7, 2019; and

WHEREAS, in connection with Contract No. DPW17-167, Phase 2, (PH2) The LandTek Group, Inc., by letter dated November 7, 2019 has requested an extension of time for this project, at no additional construction cost to the Town of Oyster Bay; and

WHEREAS, in connection with Contract No. DPW17-167, Phase 2, (PH2) LiRo Engineers, Inc., by letter dated November 7, 2019 has recommended an extension of time for 70 calendar days beyond the current completion date, with a new completion date of September 18, 2019; and

WHEREAS, in connection with Contract No. DPW17-167, Phase 2, (PH2) LiRo Engineers, Inc., by letter dated November 8, 2019 concerning increases/decreases in quantities, has noted a total net decrease of cost in the amount of $543,661.92; and

WHEREAS, Richard W. Lenz, P.E., Commissioner, Department of Public Works/Highways, by memoranda dated November 4, 2019 and November 8, 2019, requested Town Board authorization for the decrease in the amount of $543,661.92 and a time extension for The LandTek Group, Inc. relative to the construction of Contract No. DP17-167-PH2;

NOW, THEREFORE, BE IT RESOLVED, That the requests as hereinabove set forth are hereby accepted and approved, and the Town Board hereby authorizes the decrease of $543,661.92 in costs and approves a time extension for The LandTek Group, Inc. of seventy (70) days to September 18, 2019.

-#-

The foregoing resolution was declared adopted after a poll of the members of the Board; the vote being recorded as follows:

Supervisor Saladino	Aye
Councilman Muscarella	Aye
Councilman Macagnone	Aye
Councilwoman Johnson	Aye
Councilman Imbroto	Aye
Councilman Hand	Aye
Councilman Labriola	Aye

33

TOWN OF OYSTER BAY

INTER-DEPARTMENTAL MEMO

November 4, 2019

TO: MEMORANDUM DOCKET

FROM: RICHARD W. LENZ, P.E., COMMISSIONER
DEPARTMENT OF PUBLIC WORKS/HIGHWAY

SUBJECT: QUANTITY INCREASE/DECREASE & EXTENSION OF CONTRACT
EXPANSION OF ELLSWORTH W. ALLEN TOWN PARK – PHASE 2
CONTRACT NO. DP17-167-PH2
SUPPLEMENTAL MEMO TO FOLLOW

Additional information will be provided in a Supplemental Docket Memorandum at the next docket meeting. We, therefore, recommend and request that a space be reserved at the next Town Board meeting on November 19. 2019 to take action on the quantity increases/decreases and extension of contract.

RICHARD W. LENZ, P.E.
COMMISSIONER
DEPARTMENT OF PUBLIC WORKS/HIGHWAY

RWL/JCT/MR/DJH/lk

cc: Office of the Town Attorney (w/9 copies)
Steven Ballas, Comptroller
Joseph Pinto, Commissioner/Parks
Kathy Stefanich, DPW/Administration Division

DP17-167-PH2 DOCKET HOLD A SPOT

25

TOWN OF OYSTER BAY

INTER-DEPARTMENTAL MEMO

November 8, 2019

TO : MEMORANDUM DOCKET

FROM : RICHARD W. LENZ, P.E., COMMISSIONER
DEPARTMENT OF PUBLIC WORKS/HIGHWAY

SUBJECT: SUPPLEMENTAL DOCKET MEMO TO ITEM NO. 33
DOCKET OF NOVEMBER 5, 2019
QUANTITY INCREASE/DECREASE AND EXTENSION OF TIME
EXPANSION OF ELLSWORTH W. ALLEN PARK PHASE 2
CONTRACT NO. DP17-167-PH2

In furtherance to Item #33 of the Docket of November 5, 2019, attached is a letter, with backup, from The LiRo Group, dated November 8, 2019 concerning increases/decreases in quantities with a total net decrease in the amount of $543,661.92. Said quantity increases and decreases are explained by the consultant in this correspondence and further described as per the attached tabulation.

Also attached is a copy of a letter dated November 7, 2019 from The LandTek Group, Inc. requesting an extension of time for this project at no additional construction cost to the Town of Oyster Bay.

The original completion was May 31, 2019, but work was delayed due to winter weather and final approvals for the traffic signal construction from the Nassau County Department of Public Works.

In addition, attached is a letter from The LiRo Group dated November 7, 2019 recommending an extension of time for 70 calendar days beyond the current completion date. The new completion date is September 18, 2019.

It is hereby requested that the Town Board authorize, by resolution, the above-described request having a net result of a decrease in the amount of $543,661.92 and recommended and requested that the contractor, The LandTek Group, Inc. be granted the extension of time relative to the construction of Contract No. DP17-167-PH2.

RICHARD W. LENZ, P.E.
COMMISSIONER
DEPARTMENT OF PUBLIC WORKS/HIGHWAY

RWL/JCT/MR/DJH/lk

Attachments

c: Office of the Town Attorney (w/9 copies)
Steven Ballas, Comptroller
Joseph Pinto, Commissioner/Parks
Kathy Stefanich, Administation/DPW

DP17-167-PH2 DKT QI & QD EXT TIME

The LiRo Group
Three Aerial Way, Syosset, NY 11791 Telephone 516.938.5476 Facsimile 516.937.5421 www.liro.com

EXPANSION OF ELLSWORTH W. ALLEN PARK- PHASE II
CONTRACT NO.: DP17-167-PH2
QUANTITY INCREASES / DECREASES
Dated: 08 November 2019

Contractor: The Landtek Group, Inc.
Item No.: As Listed Below
Resident Representative: Angelo Karastamatis

AUTHORIZED CHANGE: QUANTITY INCREASES AND DECREASES

PROJECT SUMMARY

Bid Amount:	-	$ 7,010,467.00
Reserve Amount:	-	$ 0
Sub Total:	-	$ 7,010,467.00
Notification No. 1 (TBR Pending)	-	$ (543,661.92)
Final Construction Cost	-	$ 6,466,805.08

Signed By: _____
Michael Smith, P.E.
Senior Vice President
The LiRo Group

THE LANDTEK GROUP, INC.
LANDTEK

235 COUNTY LINE ROAD, AMITYVILLE, NY 11701
OFFICE (631) 691-2381 • FAX (631) 598-8280

November 7, 2019
The LiRo Group
235 East Jericho Turnpike
Mineola, NY 11501
Attn: Michael Smith

Re: Expansion of Ellsworth W. Allen Park Phase 2
Contract # DP17-167PH2
Extension of Time Request

Dear Mr. Smith,
In review of the above referenced project, we hereby request an extension of contract time due to the following items:

- Due to the inclement winter weather and excessive wet spring months, certain activities related to earthwork and construction have been deemed imperfect and unworkable. Existing onsite soils did not drain adequately and as a result needed to be amended and/or removed due to its unsuitability.
- Delay in receiving final approvals, signoffs, and plans for Nassau County DPW traffic, drainage and intersection modifications.

The above require that our completion date be extended to September 18, 2019. We hereby request an extension of time of 70 days at no additional cost to the Town of Oyster Bay.

If you have any questions, feel free to contact us directly.

Respectfully,

Steve Kuzmiskas
Senior Project Manager

The LiRo Group
Three Aerial Way, Syosset, NY 11791 Telephone 516.938.5476 Facsimile 516.937.5421 www.liro.com

November 7, 2019

Richard Lenz, P.E.
Commissioner of Public Works
Town of Oyster Bay
150 Miller Place, Syosset, New York, 11791

Re: Town of Oyster Bay
Expansion Ellsworth Allen Park Phase II
Contract No. DP17-167-PH2
Discontinuance & Extension of Time Recommendation

Dear Commissioner Lenz:

LiRo Engineers, Inc. recommends approving a 40 day discontinuance and 70 day extension of time to LandTek as described below.

- The contract awarded to LandTek included 150 calendar days to complete the work. The start of construction was scheduled for January 2, 2019. The contract construction completion date was initially May 31, 2019.
- Work was halted from January 22, 2019 through February 1, 2019 due to weather conditions. LiRo recommends an 11 day discontinuance.
- Construction was resumed from February 2, 2019 through May 31, 2019 totaling 139 calendar days. Based upon the above 11 day discontinuance, the new construction completion date should be extended to June 11, 2019.
- The work commenced from June 12, 2019 through August 5, 2019 is beyond the agreed upon calendar days in the contract and LiRo recommends a 55 day extension to the contract.
- A discontinuance of 29 days from August 6, 20219 through September 3, 2019 is recommended due to the delay in receiving NCDPW approved 239f plans and time needed to agree upon a new cost of construction for the two alternate items.
- LandTek completed working from September 4, 2019 through September 18, 2019, extending 15 days to the construction schedule.

If you have any questions regarding this matter, please do not hesitate to call.

Very truly yours,

LiRo Engineers, Inc.

Michael Smith, P.E.
Senior Vice President

The LiRo Group
Three Aerial Way, Syosset, NY 11791 Telephone 516.938.5476 Facsimile 516.937.5421 www.liro.com

EXPANSION OF ELLSWORTH W. ALLEN PARK- PHASE II
CONTRACT NO.: DP17-167-PH2
QUANTITY INCREASES / DECREASES
Dated: 08 November 2019

Contractor: The Landtek Group, Inc.
Item No.: As Listed Below
Resident Representative: Angelo Karastamatis

Authorized Change: QUANTITY INCREASES AND DECREASES

DECREASES

ITEM 5S-M:	**Drainable Fill**	
	Decrease Estimated Quantity From 3000 CY to 2389 CY	
	Decrease in cost of 611 CY @ Unit Price Bid of $55 =	$ (33,605.00)

Reason: The item quantity is decreased due to the actual field measurement.

ITEM 12H:	**Clean Existing Drainage System**	
	Decrease Estimated Quantity From 2000 LF to 0 LF	
	Decrease in cost of 2000 LF @ Unit Price Bid of $6 =	$ (12,000.00)

Reason: The item was not utilized in the contract.

ITEM 12S40-4:	**Schedule 40 PVC Pipe – 4" Dia. for Irrigation Sleeve**	
	Decrease Estimated Quantity From 1200 LF to 652 LF	
	Decrease in cost of 548 LF @ Unit Price Bid of $12 =	$ (6,576.00)

Reason: The item quantity is decreased due to the actual field measurement.

ITEM 17A:	**Class A Concrete for Structures**	
	Decrease Estimated Quantity From 180 CY to 55 CY	
	Decrease in cost of 125 CY @ Unit Price Bid of $995 =	$ (124,375.00)

Reason: The item quantity is decreased due to the actual field measurement.

ITEM 26-M-E12:	**Concrete Mow Strip – 12" Width Flush w/ Grade 6" Depth Under Exist. CLF**	
	Decrease Estimated Quantity From 440 LF to 0 LF	
	Decrease in cost of 440 LF @ Unit Price Bid of $26 =	$ (11,440.00)

Reason: The item was not used during the contract.

ITEM 34:	**Miscellaneous Metals**	
	Decrease Estimated Quantity From 8260 LBS to 4730 LBS	
	Decrease in cost of 3530 LBS @ Unit Price Bid of $4 =	$ (14,120.00)

Reason: The item quantity is decreased due to the actual field measurement.

ITEM 98-C:	**Maintenance and Protection of Traffic**	
	Decrease Estimated Quantity From 1 LS to 0 LS	
	Decrease in cost of 1 LS @ Unit Price Bid of $28000 =	$ (28,000.00)

Reason: The item was not utilized in the contract.

ITEM 141A:	**Strawbales for Sediment Control**	
	Decrease Estimated Quantity From 4500 LF to 0 LF	
	Decrease in cost of 4500 LF @ Unit Price Bid of $9 =	$ (40,500.00)

Reason: The item was not utilized in the contract.

EXPANSION OF ELLSWORTH W. ALLEN PARK- PHASE II
CONTRACT NO.: DP17-167-PH2
QUANTITY INCREASES / DECREASES
Dated: 08 November 2019

Contractor: The Landtek Group, Inc.
Item No.: As Listed Below
Resident Representative: Angelo Karastamatis

ITEM 367:	**Hydro-Seeding**	
	Decrease Estimated Quantity From 3 ACRE to 1.22 ACRE	
	Decrease in cost of 1.78 ACRE @ Unit Price Bid of $10000 =	$(17800.00)

Reason: The item was not utilized in the contract / the item quantity is decreased due to the actual field measurement.

ITEM 599:	**New Underground Sprinkler System**	
	Decrease Estimated Quantity From 1 LS to 0.85 LS	
	Decrease in cost of 0.15 LS @ Unit Price Bid of $215000 =	$ (32,250.00)

Reason: The item quantity is decreased due to the actual field measurement.

ITEM 621:	**Decorate Planters Block Wall**	
	Decrease Estimated Quantity From 550 SF to 0 SF	
	Decrease in cost of 550 SF @ Unit Price Bid of $61 =	$ (33,550.00)

Reason: The item was not utilized in the contract.

ITEM 1000-T*:	**Contaminated Materials Removal – Tanks and Drums (Contingency)**	
	Decrease Estimated Quantity From 5 CY to 0 CY	
	Decrease in cost of 5 CY @ Unit Price Bid of $8000 =	$ (40,000.00)

Reason: The item was not utilized in the contract.

ITEM 1000-S*:	**Contaminated Materials Removal – Contaminated Soils (Contingency)**	
	Decrease Estimated Quantity From 10 CY to 0 CY	
	Decrease in cost of 10 CY @ Unit Price Bid of $150 =	$ (1,500.00)

Reason: The item was not utilized in the contract.

ITEM 1001:	**Allowance**	
	Decrease Estimated Quantity From 1 LS to 0.757 LS	
	Decrease in cost of 0.243 LS @ Unit Price Bid of $20000 =	$ (48,647.78)

Reason: The item quantity is decreased due to the actual field conditions.

ITEM Alt 1:		
	Decrease Estimated Quantity From 1 LS to 0.169 LS	
	Decrease in cost of 0.831 LS @ Unit Price Bid of $318000 =	$ (264,400.00)

Reason: The item quantity is decreased due to the actual field measurement.

ITEM Alt 2:		
	Decrease Estimated Quantity From 1 LS to 0 LS	
	Decrease in cost of 1 LS @ Unit Price Bid of $159000 =	$ (159,000.00)

Reason: The item was not utilized in the contract.

The LiRo Group
Three Aerial Way, Syosset, NY 11791 Telephone 516.938.5476 Facsimile 516.937.5421 www.liro.com

EXPANSION OF ELLSWORTH W. ALLEN PARK- PHASE II
CONTRACT NO.: DP17-167-PH2
QUANTITY INCREASES / DECREASES
Dated: 08 November 2019

Contractor: The Landtek Group, Inc.
Item No.: As Listed Below
Resident Representative: Angelo Karastamatis

INCREASES

ITEM 2M:	**Unclassified Excavation**	
	Increase Estimated Quantity From 5200 CY to 5423 CY	
	Increase in cost of 223 CY @ Unit Price Bid of $36 =	$ 8,028.00

Reason: The item quantity is increased due to the inclusion of payment for Alternative 1 work completed but not paid under that item.

ITEM 4A:	**Removal of Concrete**	
	Increase Estimated Quantity From 5 CY to 6 CY	
	Increase in cost of 1 CY @ Unit Price Bid of $85 =	$ 85.00

Reason: The item quantity is increased due to the inclusion of payment for Alternative 1 work completed but not paid under that item.

ITEM 9:	**Topsoil**	
	Increase Estimated Quantity From 3915 CY to 5400 CY	
	Increase in cost of 1485 CY @ Unit Price Bid of $45 =	$ 66,825.00

Reason: The item quantity is increased due to the inclusion of payment for Alternative 1 work completed but not paid under that item.

ITEM 12B-M-15:	**Furnish and Lay 15" Dia. Smooth Interior Corr. Polyethylene Pipe**	
	Increase Estimated Quantity From 550 LF to 580 LF	
	Increase in cost of 30 LF @ Unit Price Bid of $29 =	$ 870.00

Reason: The item quantity is increased due to the inclusion of payment for Alternative 1 work completed but not paid under that item.

ITEM 15DW-M:	**10' Diameter Diffusion Wells – 10' Depth**	
	Increase Estimated Quantity From 1 EA to 3 EA	
	Increase in cost of 2 EA @ Unit Price Bid of $3800 =	$ 7,600.00

Reason: The item quantity is increased due to the inclusion of payment for Alternative 1 work completed but not paid under that item.

ITEM 21:	**Limestone Screenings**	
	Increase Estimated Quantity From 250 CY to 396 CY	
	Increase in cost of 146 CY @ Unit Price Bid of $65 =	$ 9,490.00

Reason: The item quantity is increased due to the actual field measurement.

ITEM 26:	**Concrete Curb – 6" Reveal**	
	Increase Estimated Quantity From 30 LF to 651 LF	
	Increase in cost of 621 LF @ Unit Price Bid of $33 =	$ 20,493.00

Reason: The item quantity is increased due to the inclusion of payment for Alternative 1 work completed but not paid under that item.

The LiRo Group
Three Aerial Way, Syosset, NY 11791 Telephone 516.938.5476 Facsimile 516.937.5421 www.liro.com

EXPANSION OF ELLSWORTH W. ALLEN PARK- PHASE II
CONTRACT NO.: DP17-167-PH2
QUANTITY INCREASES / DECREASES
Dated: 08 November 2019

Contractor: The Landtek Group, Inc.
Item No.: As Listed Below
Resident Representative: Angelo Karastamatis

ITEM 26-M-F8:	**Concrete Curb – 8" Width With Flush With Grade**	
	Increase Estimated Quantity From 1305 LF to 1327 LF	
	Increase in cost of 22 LF @ Unit Price Bid of $35 =	$ 770.00

Reason: The item quantity is increased due to the addition of "bump-outs" to the multi-purpose field during construction.

ITEM 26-M-F12:	**Concrete Curb – 12" Width With Flush With Grade**	
	Increase Estimated Quantity From 503 LF to 1027.6 LF	
	Increase in cost of 524.6 LF @ Unit Price Bid of $28 =	$ 14,688.80

Reason: The item quantity is increased due to a design change during construction, retaining walls around the multi-purpose field were removed and replaced with 12" flush curb, resulting in a net savings.

ITEM 27:	**Cement Concrete Sidewalk**	
	Increase Estimated Quantity From 90200 SF to 96499 SF	
	Increase in cost of 6299 SF @ Unit Price Bid of $9 =	$ 56,691.00

Reason: The item quantity is increased due to the inclusion of payment for Alternative 1 work completed but not billed under that item and the elimination of raised planters and mulch areas.

ITEM 30:	**Metal Reinforcement for Concrete Pavement**	
	Increase Estimated Quantity From 9250 SY to 9671.78 SY	
	Increase in cost of 421.78 SY @ Unit Price Bid of $8 =	$ 3,374.24

Reason: The item quantity is increased due to the increase in cement concrete sidewalk.

ITEM 36D:	**Asphalt Concrete Type 1A**	
	Increase Estimated Quantity From 5 TON to 96.47 TON	
	Increase in cost of 91.47 TON @ Unit Price Bid of $220 =	$ 20,123.40

Reason: The item quantity is increased due to the inclusion of payment for Alternative 1 work completed but not paid under that item.

ITEM 36E:	**Asphalt Concrete Type 1AC**	
	Increase Estimated Quantity From 368 TON to 553.46 TON	
	Increase in cost of 185.46 TON @ Unit Price Bid of $250 =	$ 46,365.00

Reason: The item quantity is increased due to the inclusion of payment for Alternative 1 work completed but not paid under that item.

ITEM 58RPC:	**Sawcutting Existing Roadway Pavement and Concrete**	
	Increase Estimated Quantity From 30 LF to 174 LF	
	Increase in cost of 144 LF @ Unit Price Bid of $7.50 =	$ 1,080.00

Reason: The item quantity is increased due to the inclusion of payment for Alternative 1 work completed but not paid under that item.

The LiRo Group
Three Aerial Way, Syosset, NY 11791 Telephone 516.938.5476 Facsimile 516.937.5421 www.liro.com

EXPANSION OF ELLSWORTH W. ALLEN PARK- PHASE II
CONTRACT NO.: DP17-167-PH2
QUANTITY INCREASES / DECREASES
Dated: 08 November 2019

Contractor: The Landtek Group, Inc.
Item No.: As Listed Below
Resident Representative: Angelo Karastamatis

ITEM 104PA-M-4:	**Vinyl Clad Chain Link Fence – 4' Ht., 2" Mesh**	
	Increase Estimated Quantity From 804 LF to 848 LF	
	Increase in cost of 44 LF @ Unit Price Bid of $46 =	$ 2,024.00

Reason: The item quantity is increased due to the addition of "bump-outs" to the multi-purpose field during construction.

ITEM 112:	**Adjusting Manholes**	
	Increase Estimated Quantity From 5 EA to 34 EA	
	Increase in cost of 29 EA @ Unit Price Bid of $700 =	$ 20,300.00

Reason: During construction, the existing manholes on site were assessed to be ADA Compliant and were therefore adjusted rather than removed and replaced.

ITEM 362:	**Triple Shredded Mulch**	
	Increase Estimated Quantity From 10 CY to 41 CY	
	Increase in cost of 31 CY @ Unit Price Bid of $42 =	$ 1,302.00

Reason: The item quantity is increased due to the actual field measurement.

ITEM 396:	**Planting Sod**	
	Increase Estimated Quantity From 13650 SY to 16196.22 SY	
	Increase in cost of 2546.22 SY @ Unit Price Bid of $11 =	$ 28,008.42

Reason: The item quantity is increased due to the inclusion of payment for Alternative 1 work completed but not paid under that item.

ITEM 398:	**Dense Graded Aggregate Base Course/RCA**	
	Increase Estimated Quantity From 1750 CY to 1870 CY	
	Increase in cost of 120 CY @ Unit Price Bid of $45 =	$ 5,400.00

Reason: The item quantity is increased due to the inclusion of payment for Alternative 1 work completed but not paid under that item.

ITEM 701A:	**Synthetic Turf Field – Soccer**	
	Increase Estimated Quantity From 100000 SF to 100660 SF	
	Increase in cost of 660 SF @ Unit Price Bid of $6 =	$ 3,960.00

Reason: The item quantity is increased due to the addition of "bump-outs" to the multi-purpose field during construction.

ITEM 704:	**Warning Track Surface**	
	Increase Estimated Quantity From 190 CY to 208 CY	
	Increase in cost of 18 CY @ Unit Price Bid of $368 =	$ 6,624.00

Reason: The item quantity is increased due to the actual field measurement.

WHEREAS, Mr. Michael Dell'Anno, Vice-President of the Nassau Shores Civic Association, P.O. Box 171 Massapequa, New York 11758, by letter dated October 7, 2019, requested the closure of Unqua Road at Suffolk Road, Nassau Road at Roy Avenue and Nassau Road at Holiday Avenue, in Massapequa, from 12:00p.m. to 10:00p.m., as well as the use of one (1) show mobile (location to be discussed), six (6) to eight (8) complete barricades for the ingress/egress points mentioned hereinabove, and two (2) portable lights, for Unqua Circle, for the Civic Association's Holiday Tree Lighting Event, to be held on Friday, November 29, 2019, from 12:00 pm until 10:00 pm; and

WHEREAS, Mr. Michael Dell'Anno, Vice-President of the Nassau Civic Association, by letter dated October 7, 2019, requests further that the Town Board waive Chapter 82 of the Code of the Town of Oyster Bay, "Alcoholic Beverages", Section 82-3, "Prohibitions", for the duration of the aforementioned event; and

WHEREAS, John P. Bishop, Deputy Commissioner of the Highway Department, by memorandum dated November 7, 2019, advised that the above-mentioned property and equipment will not be required for use by the Town at that time, and that the Highway Department has no objection to providing the Nassau Shores Civic Association with the closure of Unqua Road at Suffolk Road, Nassau Road at Roy Avenue and Nassau Road at Holiday Avenue, in Massapequa, from 12:00p.m. to 10:00p.m., as well as the use of one (1) show mobile (location to be discussed), six (6) to eight (8) complete barricades for the ingress/egress points mentioned hereinabove, and two (2) portable lights, for Unqua Circle, for the Civic Association's Holiday Tree Lighting Event, to be held on Friday, November 29, 2019, from 12:00 pm until 10:00 pm; and

WHEREAS, the Town Board deems this event to be an appropriate and worthwhile endeavor, and one which will benefit the residents of the Town of Oyster Bay,

NOW, THEREFORE, BE IT RESOLVED, That the abovementioned requests are hereby accepted and approved, and the Highway Department is hereby authorized to provide the Nassau Shores Civic Association with the closure of Unqua Road at Suffolk Road, Nassau Road at Roy Avenue and Nassau Road at Holiday Avenue, in Massapequa, from 12:00p.m. to 10:00p.m., as well as the use of one (1) show mobile (location to be discussed), six (6) to eight (8) complete barricades for the ingress/egress points mentioned hereinabove, and two (2) portable lights, for Unqua Circle, for the Civic Association's Holiday Tree Lighting Event, to be held on Friday, November 29, 2019, from 12:00 pm until 10:00 pm; with the provisions of Chapter 82 of the Code of the Town of Oyster Bay, "Alcoholic Beverages", Section 82-3, "Prohibitions", waived for the duration of the aforementioned event; and subject to the following terms and conditions:

Reviewed By
Office of Town Attorney

1. The use of all Town property shall be in conformance with the direction of the Commissioner of the Department of Public Works or his duly authorized representative;

2. The said organization shall comply with all ordinances of the Town of Oyster Bay, both in its use of Town property and equipment, and in the conduct of the afore-described activity; and

3. The said organization shall file a certificate of insurance with the Office of the Town Clerk, indicating said organization maintains general liability insurance in the amount of $2,000,000 bodily injury and $1,000,000 property damage, and naming the Town as an additional insured, in connection with the afore-described activity.

-#-

The foregoing resolution was declared adopted after a poll of the members of the Board; the vote being recorded as follows:

Supervisor Saladino	Aye
Councilman Muscarella	Aye
Councilman Macagnone	Aye
Councilwoman Johnson	Aye
Councilman Imbroto	Aye
Councilman Hand	Aye
Councilman Labriola	Aye

37

TOWN OF OYSTER BAY

Inter-Departmental Memo

November 4, 2019

TO: MEMORANDUM DOCKET

FROM: JOHN P. BISHOP, DEPUTY COMMISSIONER
HIGHWAY DEPARTMENT

SUBJECT: NASSAU SHORES CIVIC ASSOC. TREE LIGHTING EVENT

Please reserve a space on the Town Board calendar of November 19th 2019 with respect to the Nassau Shores Civic Association Tree Lighting event on November 29th 2019. Supplemental memorandum to follow.

JOHN P. BISHOP, DEPUTY COMMISSIONER
HIGHWAY DEPARTMENT

JPB/kaz
Attachments

C: Town Attorney (9) copies
Richard Lenz, Commissioner of DPW
Doug Robalino, General Foreman 002
Peter Brown, General Foreman 003
Justin McCaffrey, Commissioner, Department of Public Safety
Grace SantaMaria, Highway Administration

DEPUTY COMM/HIGHWAY

Kim 2

NASSAU SHORES CIVIC ASSOCIATION
Post Office Box 171
Massapequa, N.Y. 11758

October 7, 2019

Joseph Pinto
Town of Oyster Bay
977 Hicksville Rd,
Massapequa New York 11758

Dear Mr. Pinto

On behalf of the Nassau Shores Civic Association, we are respectfully requesting permission to host our annual Holiday Tree Lighting Event. As in the past, it will be held at Unqua Circle in Nassau Shores. We are targeting the date of Friday, November 29, 2019 between 6pm and 8pm. As always, we begin our setup at 12:00pm that day.

In conjunction with the Holiday Tree Lighting Event, we are requesting the following:

- Road Closure for the following ingress points: Unqua Road at Suffolk Road, Nassau Road at Roy Avenue and Nassau Road at Hollywood Avenue from approximately 12:00PM to 10:00PM.
- One Showmobile (location to be discussed)
- 6-8 barricades / 2 for the aforementioned ingress/egress points noted above
- Open Container law waived for the day. Please include this in your response.
- 2 Portable Lights for the Unqua Circle

Thank you in advance for your assistance in this matter and if there are any questions, please contact me on my cellphone at [redacted]

Sincerely,

Michael Dell'Anno
Vice President
Nassau Shores Civic Association

Share to Leg Rs

CC: Commissioner Joseph Pinto
Commissioner John Bishop
Commissioner Justin McCaffrey
Deputy Commissioner Frank Gatto
John Guerirro, President of Nassau Shores Civic Association

31

TOWN OF OYSTER BAY

Inter-Departmental Memo

November 7, 2019

TO: MEMORANDUM DOCKET

FROM: JOHN P. BISHOP, DEPUTY COMMISSIONER
HIGHWAY DEPARTMENT

SUBJECT: NASSAU SHORES CIVIC ASSOC. ANNUAL HOLIDAY TREE LIGHTING EVENT
TO BE HELD FRIDAY, NOVEMBER 29TH, 2019
SUPPLIMENTAL MEMO MD 11/5/19 #37

Enclosed please find a copy of the letter from Michael Dell'Anno, Vice President, requesting our assistance on behalf of the Nassau Shores Civic Association in conducting their annual Holiday Tree Lighting Event Friday, November 29th 2019 from 12:00 pm to 10:00 pm.

The Highway Department has no objection to the Nassau Shores Civic Assocation utilizing Unqua Road at Suffolk Road, Nassau Road at Roy Avenue and Nassau Road at Hollywood Avenue from 12:00 pm to 10:00pm in Massapequa on Friday, November 29th, 2019 for their annual Holiday Tree Lighting Event.

Further, the Highway Department will be pleased to provide eight (8) complete barricades for this event.

The Organization is also requesting the waiver of the Town Ordinance pertaining to the consumption of alcoholic beverages in public (Chapter 82-3 of the Town of Oyster Bay) on behalf of the Nassau Shores Civic Association during their event on November 29th, 2019.

Also attached is a Certificate of Insurance and Endorsement Sheet to cover this event, therefore, Town Board approval is requested.

JOHN P. BISHOP, DEPUTY COMMISSIONER
HIGHWAY DEPARTMENT

JPB/kaz

Attachments
CC: Town Attorney (9) copies
Richard Lenz, P.E., Commissioner DPW
Doug Robalino, General Foreman 002
Peter Brown, General Foreman 003
Justin McCaffrey, Commissioner, Department of Public Safety
Grace SantaMaria, Highway Administration

DEPUTY COMM/HIGHWAY

Kim 2

NASSAU SHORES CIVIC ASSOCIATION
Post Office Box 171
Massapequa, N.Y. 11758

October 7, 2019

Supervisor Joseph S. Saladino
Town of Oyster Bay
54 Audrey Avenue
Oyster Bay, New York 11771-1592

Dear Supervisor Saladino

On behalf of the Nassau Shores Civic Association, we are respectfully requesting permission to host our annual Holiday Tree Lighting Event. As in the past, it will be held at Unqua Circle in Nassau Shores. We are targeting the date of Friday, November 29, 2019 between 6pm and 8pm. As always, we begin our setup at 12:00pm that day.

In conjunction with the Holiday Tree Lighting Event, we are requesting the following:

- Road Closure for the following ingress points: Unqua Road at Suffolk Road, Nassau Road at Roy Avenue and Nassau Road at Hollywood Avenue from approximately 12:00PM to 10:00PM.
- One Showmobile (location to be discussed)
- 6-8 barricades / 2 for the aforementioned ingress/egress points noted above
- Open Container law waived for the day. Please include this in your response.
- 2 Portable Lights for the Unqua Circle

Thank you in advance for your assistance in this matter and if there are any questions, please contact me on my cellphone at 516-510-5583.

Sincerely,

Michael Dell'Anno
Vice President
Nassau Shores Civic Association

CC: Commissioner Joseph Pinto
Commissioner John Bishop
Commissioner Justin McCaffrey
Deputy Commissioner Frank Gatto
John Guerirro, President of Nassau Shores Civic Association

ACORD®

CERTIFICATE OF LIABILITY INSURANCE

DATE (MM/DD/YYYY) 11/6/2019

THIS CERTIFICATE IS ISSUED AS A MATTER OF INFORMATION ONLY AND CONFERS NO RIGHTS UPON THE CERTIFICATE HOLDER. THIS CERTIFICATE DOES NOT AFFIRMATIVELY OR NEGATIVELY AMEND, EXTEND OR ALTER THE COVERAGE AFFORDED BY THE POLICIES BELOW. THIS CERTIFICATE OF INSURANCE DOES NOT CONSTITUTE A CONTRACT BETWEEN THE ISSUING INSURER(S), AUTHORIZED REPRESENTATIVE OR PRODUCER, AND THE CERTIFICATE HOLDER.

IMPORTANT: If the certificate holder is an ADDITIONAL INSURED, the policy(ies) must have ADDITIONAL INSURED provisions or be endorsed. If SUBROGATION IS WAIVED, subject to the terms and conditions of the policy, certain policies may require an endorsement. A statement on this certificate does not confer rights to the certificate holder in lieu of such endorsement(s).

PRODUCER
Completely Covered Insurance Agency, Inc
5649 Merrick Road
Massapequa, New York 11758

CONTACT NAME:
PHONE (A/C, No, Ext): 516-795-2642 FAX (A/C, No): 516-795-3634
E-MAIL ADDRESS:

INSURER(S) AFFORDING COVERAGE	NAIC #
INSURER A : United States Liability Ins Co	
INSURER B :	
INSURER C :	
INSURER D :	
INSURER E :	
INSURER F :	

INSURED
Nassau Shores Civic Association
PO Box 171
Massapequa, NY 11758

COVERAGES CERTIFICATE NUMBER: REVISION NUMBER:

THIS IS TO CERTIFY THAT THE POLICIES OF INSURANCE LISTED BELOW HAVE BEEN ISSUED TO THE INSURED NAMED ABOVE FOR THE POLICY PERIOD INDICATED. NOTWITHSTANDING ANY REQUIREMENT, TERM OR CONDITION OF ANY CONTRACT OR OTHER DOCUMENT WITH RESPECT TO WHICH THIS CERTIFICATE MAY BE ISSUED OR MAY PERTAIN, THE INSURANCE AFFORDED BY THE POLICIES DESCRIBED HEREIN IS SUBJECT TO ALL THE TERMS, EXCLUSIONS AND CONDITIONS OF SUCH POLICIES. LIMITS SHOWN MAY HAVE BEEN REDUCED BY PAID CLAIMS.

INSR LTR	TYPE OF INSURANCE	ADDL INSD	SUBR WVD	POLICY NUMBER	POLICY EFF (MM/DD/YYYY)	POLICY EXP (MM/DD/YYYY)	LIMITS	
A	✓ COMMERCIAL GENERAL LIABILITY CLAIMS-MADE ✓ OCCUR GEN'L AGGREGATE LIMIT APPLIES PER: POLICY ✓ PRO-JECT LOC OTHER:	X		CL1968083	11/29/19	11/29/19	EACH OCCURRENCE	$ 1,000,000
							DAMAGE TO RENTED PREMISES (Ea occurrence)	$ 100,000
							MED EXP (Any one person)	$ 1,000
							PERSONAL & ADV INJURY	$ 1,000,000
							GENERAL AGGREGATE	$ 2,000,000
							PRODUCTS - COMP/OP AGG	$ N/A
								$
	AUTOMOBILE LIABILITY ANY AUTO OWNED AUTOS ONLY HIRED AUTOS ONLY SCHEDULED AUTOS NON-OWNED AUTOS ONLY						COMBINED SINGLE LIMIT (Ea accident)	$
							BODILY INJURY (Per person)	$
							BODILY INJURY (Per accident)	$
							PROPERTY DAMAGE (Per accident)	$
								$
	UMBRELLA LIAB OCCUR EXCESS LIAB CLAIMS-MADE DED RETENTION $						EACH OCCURRENCE	$
							AGGREGATE	$
								$
	WORKERS COMPENSATION AND EMPLOYERS' LIABILITY ANYPROPRIETOR/PARTNER/EXECUTIVE OFFICER/MEMBER EXCLUDED? Y / N (Mandatory in NH) If yes, describe under DESCRIPTION OF OPERATIONS below	N / A					PER STATUTE OTH-ER	
							E.L. EACH ACCIDENT	$
							E.L. DISEASE - EA EMPLOYEE	$
							E.L. DISEASE - POLICY LIMIT	$

DESCRIPTION OF OPERATIONS / LOCATIONS / VEHICLES (ACORD 101, Additional Remarks Schedule, may be attached if more space is required)

The limits include applicable retentions. The Town of Oyster Bay, its officers, employees, servants, agents and enumerated volunteers are included as Additional Insured if required by written contract with respect to use of property and equipment for the Tree Lighting held 11/29/2019 at: Unqua Circle, Massapequa, NY 11758

CERTIFICATE HOLDER

Town of Oyster Bay
Highway Dept & Dept of Workers Sanitation
150 Miller Place
Syosset, NY 11791

Reviewed By
Office of Town Attorney

CANCELLATION

SHOULD ANY OF THE ABOVE DESCRIBED POLICIES BE CANCELLED BEFORE THE EXPIRATION DATE THEREOF, NOTICE WILL BE DELIVERED IN ACCORDANCE WITH THE POLICY PROVISIONS.

AUTHORIZED REPRESENTATIVE

POLICY NUMBER: CL 1968083

COMMERCIAL GENERAL LIABILITY
CG 20 26 04 13

THIS ENDORSEMENT CHANGES THE POLICY. PLEASE READ IT CAREFULLY.

ADDITIONAL INSURED – DESIGNATED PERSON OR ORGANIZATION

This endorsement modifies insurance provided under the following:

COMMERCIAL GENERAL LIABILITY COVERAGE PART

SCHEDULE

Name Of Additional Insured Person(s) Or Organization(s):
Town of Oyster Bay Highway Dept & Dept of Workers Sanitation 150 Miller Place Syosset, NY 11791
Information required to complete this Schedule, if not shown above, will be shown in the Declarations.

A. **Section II – Who Is An Insured** is amended to include as an additional insured the person(s) or organization(s) shown in the Schedule, but only with respect to liability for "bodily injury", "property damage" or "personal and advertising injury" caused, in whole or in part, by your acts or omissions or the acts or omissions of those acting on your behalf:

1. In the performance of your ongoing operations; or
2. In connection with your premises owned by or rented to you.

However:

1. The insurance afforded to such additional insured only applies to the extent permitted by law; and
2. If coverage provided to the additional insured is required by a contract or agreement, the insurance afforded to such additional insured will not be broader than that which you are required by the contract or agreement to provide for such additional insured.

B. With respect to the insurance afforded to these additional insureds, the following is added to **Section III – Limits Of Insurance:**

If coverage provided to the additional insured is required by a contract or agreement, the most we will pay on behalf of the additional insured is the amount of insurance:

1. Required by the contract or agreement; or
2. Available under the applicable Limits of Insurance shown in the Declarations;

whichever is less.

This endorsement shall not increase the applicable Limits of Insurance shown in the Declarations.

Reviewed By
Office of Town Attorney

COMPLETELY COVERED INSURANCE AGENCY, INC.
5649 MERRICK ROAD
MASSAPEQUA, NY 11758
Phone: (516) 795-2642
Fax: (516) 795-3634

Completely Covered Insurance Agency

To: NASSAU SHORES CIVIC ASSOCIATION

*** BINDER ***
11/07/2019

Renewal Of: NEW

From: Claudia Ventura
claudia@completelycovered.com

Insured: **NASSAU SHORES CIVIC ASSOCIATION**

Mailing Address: **P.O. BOX 171**
MASSAPEQUA, NY 11758

Thank you for your order to bind. We appreciate your business! We have bound the below coverage. Policy to Follow Shortly

POLICY INFORMATION

COMMERCIAL LIABILITY POLICY	
Policy Number:	**CL 1968083**
Policy Period:	11/29/2019 to 12/01/2019
Carrier:	United States Liability Insurance Company
Status:	Admitted
A.M. Best Rating:	A++ (Superior) - XI

COVERAGE PART		PREMIUM
Commercial Liability		$250.00
Each Occurrence Limit	$1,000,000	
Personal & Advertising Injury Limit (Any One Person/Organization)	$1,000,000	
Medical Expense Limit (Any One Person)	$1,000	
Damages To Premises Rented To You (Any One Premises)	$100,000	
Products/Completed Operations Aggregate Limit	See L-535	
General Aggregate Limit	$2,000,000	
POLICY PREMIUM		**$250.00**

Location of All Covered Special Event(s)

1 - Unqua Circle, Massapequa, NY 11758

Reviewed By
Office of Town Attorney

APPLICABLE FORMS & ENDORSEMENTS

The following forms apply to the Commercial Liability coverage part

CG0001 12/07	Commercial General Liability Coverage Form	CG0068 05/09	Recording And Distribution Of Material Or Information In Violation Of Law Exclusion
CG0163 07/11	New York Changes - Commercial General Liability Coverage Form	CG2011 04/13	Additional Insured - Managers or Lessors of Premises

Please contact us with any questions regarding the terminology used or the coverages provided.

CG2107 05/14	Exclusion - Access Or Disclosure Of Confidential Or Personal Information And Data-Related Liability - Limited Bodily Injury Exception Not Included	CG2109 06/15	Exclusion - Unmanned Aircraft
CG2136 03/05	Exclusion - New Entities	CG2139 10/93	Contractual Liability Limitation
CG2144 07/98	Limitation Of Coverage To Designated Premises Or Project	CG2147 12/07	Employment-Related Practices Exclusion
CG2173 01/15	Exclusion Of Certified Acts Of Terrorism	CG2621 10/91	New York Changes - Transfer Of Duties When A Limit Of Insurance Is Used Up
IL0017 11/98	Common Policy Conditions	IL0023 07/02	Nuclear Energy Liability Exclusion Endorsement
IL0268 01/11	New York Changes - Cancellation And Nonrenewal	L 535 03/15	Exclusion - Products-Completed Operations Hazard Other Than Food Or Beverage Products
L-224NY 06/11	Punitive Or Exemplary Damages Exclusion	L-387 03/06	Exclusion - Mechanical Rides
L-423 02/11	Exclusion For Structure Collapse	L-472 07/08	Exclusion - Injury To Performers Or Entertainers
L-536 09/09	Exclusion - Participation In Athletic Activity, Physical Activity Or Sports	L-599 10/12	Absolute Exclusion for Pollution, Organic Pathogen, Silica, Asbestos and Lead with a Hostile Fire Exception
L-607 02/11	Exclusion For Climbing, Rebounding And Interactive Games And Devices	L-608 02/11	Exclusion For Firearms, Fireworks And Other Pyrotechnic Devices
L-609 02/11	Animal Exclusion	L-610NY 01/07	Expanded Definition Of Bodily Injury - New York
L-622 02/11	Molestation Or Abuse Exclusion	L-656 02/06	Extension Of Coverage - Committee Members
L-686 10/12	Absolute Exclusion for Liquor and Other Related Liability	L-721NY 02/09	New York Changes
L-820 12/18	Special Events Blanket Additional Insured Endorsement	LLQ 102 02/15	Event Vendor, Exhibitor And Contractor Exclusion
LLQ101 08/06	Expanded Definition Of Employee	LLQ368 08/10	Separation Of Insureds Clarification Endorsement
NTE-NY 01/15	Notice Of Terrorism Exclusion	SPE 300 05/09	Special Events Property Damage Amendment
ME Jacket 09/10	The Main Event Special Event Commercial Liability Policy Jacket		

NOTICE: THESE POLICY FORMS AND THE APPLICABLE RATES ARE EXEMPT FROM THE FILING REQUIREMENTS OF THE NEW YORK STATE INSURANCE DEPARTMENT. HOWEVER, SUCH FORMS AND RATES MEET THE MINIMUM STANDARDS OF THE NEW YORK INSURANCE LAW AND REGULATIONS.
(Free Trade Zone Statistical Code 2-14141)

Harmless Agreement for Use of Town Property and/or Equipment

This Agreement is made this 7th day of Nov 2019, by Nassau Shores Civic Association (hereinafter "CONCESSIONAIRE"). Whereas, the CONCESSIONAIRE has entered into a contract to provide certain services and products at various Town locations, as designated in the contract between the TOWN and the CONCESSIONAIRE for the contract period 11/23/19 through 11/29/19

In consideration of the Town granting the Organization permission to temporarily use Town property and/or equipment, the undersigned, on behalf of the Organization, hereby agrees to assume all liability and risk of loss and shall be responsible for the supervision and welfare of all persons arriving on and using Town property and/or equipment in connection with the abovementioned event. The undersigned further hereby releases the Town of Oyster Bay, its officers, employees, servants, agents and enumerated volunteers from any liability for any injuries sustained or damages incurred and agrees to reimburse the Town for any damages arising out of the Organization's use of the Town property and/or equipment. The undersigned agrees to indemnify and hold harmless the Town, its officers, employees, servants, agents and enumerated volunteers, and to protect and defend them against any and all claims for the loss and/or expense or suits for damage to persons or property, including its property, arising from its use of Town property and/or equipment.

Further, the Organization agrees to provide the Town with a copy of its general liability insurance certificate, in the amounts of $1,000,000 each occurrence, $2,000,000 general aggregate and, where appropriate, $1,000,000 products, naming the Town as additional insured. All certificates of insurance must be accompanied by an endorsement.

I understand that the abovementioned use of Town property and/or equipment is subject to the approval of the Town Board of the Town of Oyster Bay.

Name of Organization: Nassau Shores Civic Association

Address of Organization: P.O. Box 171
Massapequa, N.Y. 11758

By: [signature]
Authorized Representative

Title: Vice President

Telephone Number: 516-510-5583

Reviewed By
Office of Town Attorney

DATE: 11/7/19

TO: **HIGHWAY OPERATIONS**

SUBJECT: Nassau Shores Civic Association 2019 Holiday Tree Lighting Event

PLEASE DELIVER TO:

Woodland Avenue – on the side
Syosset

CONTACT: Michael Dell'Anno
516-510-5583

DATE OF EVENT: 11/29/19

BARRICADES: **8**

CONES:

SORT PAILS:

PORTABLE LIGHTS:

GENERATOR:

PACKER:

DELIVER ON: **11/27/19**

PICKUP ON: **12/2/19**

SWEEPING BEFORE AFFAIR IS NEEDED: **YES** XX **NO**

Please be advised that when signing on receipt of Town Equipment, your organization will be held responsible for their return.

JOHN P. BISHOP, DEPUTY COMMISSIONER
HIGHWAY DEPARTMENT

JPB/kaz

CC:
Peter Brown, General Foreman 003
Doug Robalino, General Foreman 002
Mike Riccardo, Regional Foreman 007
Jeff VanNostrand
Public Safety Division
Dan Kornfeld

Meeting of November 19, 2019 Resolution No. 721-2019

WHEREAS, Joseph G. Pinto, Commissioner, Department of Parks, by memorandum dated November 6, 2019, requested that the Town Board amend Resolution No. 24-2019, adopted on January 8, 2019, to increase the total authorization to D&J Refreshments Incorporated for budgeted food services for residents at various town events by $2,000.00, to a total amount not to exceed $9,000.00; and

WHEREAS, Commissioner Pinto, by said memorandum further requested that Resolution No. 24-2019 be further amended to increase the authorization by $5,500.00 for additional community event expenses related to the Town of Oyster Bay Waterfront Festival and Marine Expo held on September 14, 2019 at the Town of Oyster Bay Beach Marina for a total amount of $35,500.00, so that the total authorization under Resolution No. 24-2019, would be increased to a total amount not to exceed $50,000.00,

NOW, THEREFORE, BE IT RESOLVED, That the requests as hereinabove set forth are accepted and approved, and Resolution No. 24-2019, is amended to increase the total authorization to D&J Refreshments Incorporated for budgeted food services for residents at various town events by $2,000.00, to a total amount not to exceed $9,000.00; and be it further

RESOLVED, That Resolution No. 24-2019 is further amended to increase the authorization by $5,500.00 for additional community event expenses related to the Town of Oyster Bay Waterfront Festival and Marine Expo held on September 14, 2019 at the Town of Oyster Bay Beach Marina for a total amount of $35,500.00, so that the total authorization under Resolution No. 24-2019, is increased to a total amount not to exceed $50,000.00; and be it further

RESOLVED, That the Comptroller is hereby authorized and directed to make payment for same, upon presentation of a duly certified claim, after audit, and that the funds for said payment are to be drawn from Account No. PKS A 7110 47660 000 0000.

-#-

Reviewed By
Office of Town Attorney

The foregoing resolution was declared adopted after a poll of the members of the Board; the vote being recorded as follows:

Supervisor Saladino	Aye
Councilman Muscarella	Aye
Councilman Macagnone	Aye
Councilwoman Johnson	Aye
Councilman Imbroto	Aye
Councilman Hand	Aye
Councilman Labriola	Aye

156

TOWN OF OYSTER BAY

Inter-Departmental Memorandum

TO: Memorandum Docket

FROM: Joseph G. Pinto, Commissioner
Department of Parks

DATE: November 4, 2019

SUBJECT: Amend Resolution No. 24-2019 Event Entertainment and Utilize Food Services for Sports and Family Event Programs Supplemental Memo to Follow

---

The Department of Parks respectfully requests that a space be reserved at the next Town Board meeting on November 19, 2019 for the Town Board to authorize to amend event entertainment and food services for the Sports and Family Event Programs. Additional information will be provided in a Supplemental Memorandum Docket at the next docket meeting.

Joseph G. Pinto
Commissioner

GJP:ld
cc: Town Attorney (original + 9 copies)

6

TOWN OF OYSTER BAY
DEPARTMENT OF PARKS
INTER DEPARTMENTAL MEMO

TO: MEMORANDUM DOCKET

FROM: JOSEPH G. PINTO, COMMISSIONER OF PARKS

DATE: NOVEMBER 6, 2019

SUBJECT: AMENDMENT OF RESOLUTION NO. 24-2019
SUPPLEMENTAL MEMO TO MD 11/5/19 # 38

Resolution 24-2019, Sports and Family Event Programs (attached), gives Town Board authorization for the Department of Parks to utilize the food services of D&J Refreshments Incorporated in an amount not to exceed $7,000.00, drawn from account PKS A 7110 47670 000 0000.

The budgeted food services which include food and beverage for residents at various scheduled Town sponsored community events totaling $7,000 has been expended per authorization. The increase in authorization is a result of additional unscheduled Town sponsored community events within the 2019 calendar year.

The Department of Parks requests Town Board to amend resolution 24-2019 to increase the authorization by $2,000.00 for a total amount not to exceed $9,000.00 to be encumbered from account PKS A 7110 47670 000 0000.

In addition, The Department of Parks requests Town Board authorization to amend Resolution 24-2019 to increase the authorization by $5,500.00 for additional community event expenses related to the Town of Oyster Bay Waterfront Festival and Marine Expo held in September 14, 2019 at TOBAY Beach Marina.

Pursuant to the aforementioned, the Department of Parks recommends Town Board approval.

Joseph G. Pinto
Commissioner of Parks

JGP
Attachment
Cc: Town Attorney (+9 copies)

Meeting of January 8, 2019 Resolution No. 24-2019

Reviewed By
Office of Town Attorney

WHEREAS, by Resolution No. 73-2017, adopted on February 14, 2017, the Town Board authorized and directed EKO Productions Incorporated, to provide audio services to the Town for various special events for the period beginning February 15, 2017 through December 31, 2107 with three (3) one (1) year extension options; and

WHEREAS, by Resolution No. 714-2017, adopted on November 14, 2017, the Town Board authorized the Supervisor to exercise the first one (1) year extension option of the Agreement with EKO Productions Incorporated, from January 1, 2018 through December 31, 2018, in an amount not to exceed $140,000.00;

WHEREAS, by Resolution No. 736-2018, adopted on November 20, 2018, the Town Board authorized the Supervisor to exercise the second one (1) year extension option of the Agreement with EKO Productions Incorporated, from January 1, 2019 through December 31, 2019, in an amount not to exceed $140,000.00;

WHEREAS, by Resolution No. 251-2015, adopted on April 28, 2015, the Town Board authorized and directed D & J Refreshments Incorporated, to provide food and beverage services to the Town for the period beginning May 1, 2015 through April 30, 2020, with five (5) one (1) year extensions; and

WHEREAS, Joseph G. Pinto, Commissioner, Department of Parks, by memorandum dated December 11, 2018, requested Town Board authorization to conduct the 2019 Town of Oyster Bay Sports and Family Events Program at various Town facilities, and for the Department of Parks to utilize the services of EKO Productions Incorporated, under the terms of the aforesaid agreement, to provide audio services at events, in an amount not to exceed $5,500.00, and to utilize the food services of D & J Refreshments Incorporated, in an amount not to exceed $7,000.00, and to pay for other expenses including, but not limited to; trophies, t-shirts, and signage, in an amount not to exceed $30,000.00, for a total amount not to exceed $30,000.00, with funds to be drawn from Account No. PKS A 7110 47670 000 0000;

NOW, THEREFORE, BE IT RESOLVED, That the requests as hereinabove set forth are hereby accepted and approved, and the Department of Parks is hereby authorized to conduct the 2019 Town of Oyster Bay Sports and Family Events Program at various Town facilities, and to utilize the services of EKO Productions Incorporated, to provide audio services for said events, in an amount not to exceed $5,500.00, and the Town Board further authorizes the Department of Parks to utilize the food services of D & J Refreshments, Incorporated, in an amount not to exceed $7,000.00, and to pay for other expenses including, but not limited to; trophies, t-shirts, and signage, in an amount not to exceed $30,000.00, for a total amount not to exceed $42,500.00;

RESOLVED, That the Comptroller is hereby authorized and directed to make payment for same upon presentation of duly certified claims, after audit, and the funds for said payments are to be drawn from Account No. PKS A 7110 47670 000 0000.

-#-

The foregoing resolution was declared adopted after a poll of the members of the Board; the vote being recorded as follows:

Supervisor Saladino	Aye
Councilman Muscarella	Aye
Councilman Macagnone	Aye
Councilwoman Alesia	Aye
Councilwoman Johnson	Aye
Councilman Imbroto	Aye
Councilman Hand	Aye

cc: Supervisor
Town Attorney
Comptroller
Parks

Reviewed By
Office of Town Attorney

WHEREAS, by Resolution No. 481-2018, adopted on July 24, 2018, the Town Board authorized the Town of Oyster Bay Department of Planning and Development to utilize the consulting services of Nelson, Pope & Voorhis, LLC for the purpose of technical assistance with planning services for Planning and Zoning Modifications to the Town of Oyster Bay's "CB" (Central Business) Zoning District Designation in Hicksville, New York in an amount not to exceed $88,500.00; and

WHEREAS, Kathryn J. Eiseman, AICP, Nelson, Pope & Voorhis, LLC, by letter dated June 27, 2019, advised that the original budget had been expended and an additional budget in the amount of $34,950.00 is required in order to continue the work on the code and design standards, as well as to provide additional services that have been identified; and

WHEREAS, Elizabeth L. Maccarone, Commissioner, Department of Planning and Development, by memorandum dated November 8, 2019, requested that Resolution No. 481-2018 be amended to provide for an increase of $34,950.00 for additional Planning Services that are required in order to complete the draft code modifications for presentation to the Town Board,

NOW, THEREFORE BE IT RESOLVED, That Town Board Resolution No. 481-2018 be amended to increase the authorized fees in an amount not to exceed $34,950.00; and be it further

RESOLVED, That the Comptroller is hereby authorized and directed to make payment from Account No. PAD B 8020 44800 000 0000, upon submission of a duly certified claim, after audit.

-#-

The foregoing resolution was declared adopted after a poll of the members of the Board; the vote being recorded as follows:

Supervisor Saladino	Aye
Councilman Muscarella	Aye
Councilman Macagnone	Aye
Councilwoman Johnson	Aye
Councilman Imbroto	Aye
Councilman Hand	Aye
Councilman Labriola	Aye

40

TOWN OF OYSTER BAY

Inter-Departmental Memo

To: MEMORANDUM DOCKET

From: ELIZABETH L. MACCARONE, COMMISSIONER
DEPARTMENT OF PLANNING AND DEVELOPMENT

Date: NOVEMBER 7, 2019

Subject: INCREASE IN AUTHORIZATION
TOWN BOARD RESOLUTION NUMBER 481-2018
PLANNING SERVICES
ACCOUNT NUMBER PAD B 8020 44800 000 0000
SUPPLEMENTAL MEMO TO FOLLOW

Additional information will be provided in a Supplemental Docket Memorandum at the next docket meeting. I therefore recommend and request that a space be reserved at the next Town Board meeting on November 19, 2019.

Elizabeth L. Maccarone
ELIZABETH L. MACCARONE
COMMISSIONER

ELM:dm

cc: Legislative Affairs +9

14

Town of Oyster Bay
Inter-Departmental Memo

November 8, 2019

TO: MEMORANDUM DOCKET

FROM: ELIZABETH L. MACCARONE, COMMISSIONER
DEPARTMENT OF PLANNING AND DEVELOPMENT

SUBJECT: **SUPPLEMENTAL MEMO TO DOCKET ITEM NO. 40**
DOCKET OF NOVEMBER 5, 2019
INCREASE IN AUTHORIZATION
TOWN BOARD RESOLUTION NUMBER 481-2018
PLANNING SERVICES
ACCOUNT NUMBER PAD B 8020 44800 000 0000

On July 24, 2018, the Town Board adopted Resolution Number 481-2018 authorizing this Department to utilize the consulting services of Nelson, Pope & Voorhis, LLC for the purpose of Technical Assistance with Planning Services for Planning and Zoning Modifications to the Town of Oyster Bay's "CB" (Central Business) Zoning District Designation in Hicksville, New York in the amount not to exceed $88,500.00.

This Department is respectfully seeking approval of the Town Board to authorize an amendment to Resolution Number 481-2018 for an additional increase of $34,950.00 for additional Planning Services that are required in order to complete the draft code modifications for presentation to the Town Board.

Funds are available in Account Number PAD B 8020 44800 000 0000 to satisfy these services.

Elizabeth L. Maccarone
ELIZABETH L. MACCARONE
COMMISSIONER
BY
Timothy R. Zika
DEPUTY COMMISSIONER

ELM/dm
cc: Legislative Affairs (w/9 copies)

Reviewed By
Office of Town Attorney

WHEREAS, Elizabeth L. Maccarone, Commissioner, Department of Planning and Development, by memoranda dated July 9, 2018 and July 16, 2018, advised that the Department of Planning and Development issued a Request for Proposals ("RFP") for Planning and Zoning Modifications to the Town of Oyster Bay's "CB" (Central Business) Zoning District Designation in Hicksville, New York; and

WHEREAS, following direct solicitation to eight (8) firms, Newsday advertisement and posting of the RFP to the Town's website, one (1) response was timely received by the Department of Planning and Development; and

WHEREAS, Joseph Nocella, Town Attorney, and Thomas M. Sabellico, Special Counsel, by memorandum dated June 28, 2018, determined in accordance with Guideline 7 of the Procurement Policy, that the Department of Planning and Development complied with the Procurement Policy; and

WHEREAS, Commissioner Maccarone, by said memoranda, stated that after review of the committee's preliminary recommendations and the current workload, the Department has selected, pursuant to Guidelines 6 and 9 of the Town of Oyster Bay Procurement Policy, Nelson, Pope & Voorhis, LLC, to perform Technical Assistance with Planning Services for Planning and Zoning Modifications to the Town of Oyster Bay's "CB" (Central Business) Zoning District Designation in Hicksville, New York, for a term commencing August 1, 2018 through December 31, 2019; and

WHEREAS, the Department requested that the Town Board authorize the Town to utilize the consulting services of Nelson, Pope & Voorhis, LLC, in accordance with the specifications contained in the RFP, for the purposes of providing Technical Assistance with Planning Services for Planning and Zoning Modifications to the Town of Oyster Bay's "CB" (Central Business) Zoning District Designation in Hicksville, New York, at a cost not to exceed $88,500.00, with funds to be drawn from Account No. PAD B 8020 44800 000 0000: and

WHEREAS, the Department further requested that the Town Board authorize Nelson, Pope & Voorhis, LLC to utilize HWJ Engineering & Surveying, PLLC d/b/a Hawkins, Webb and Jaeger, as a sub-consultant and to further authorize the Supervisor and/or his designee to execute the attached agreement,

NOW, THEREFORE, BE IT RESOLVED, That the requests as hereinabove set forth are accepted and approved, and the Department of Planning and Development is hereby authorized to utilize the consulting services of Nelson, Pope & Voorhis, LLC, and Hawkins, Webb and Jaeger as s sub-consultant, for the purpose of providing Technical Services with Planning Services for Planning and Zoning Modifications to the Town of Oyster Bay's "CB" (Central Business) Zoning District Designation in Hicksville, New York, and be it further

Resolution No. 481-2018

RESOLVED, That the Comptroller is hereby authorized and directed to make payment for same to Nelson, Pope & Voorhis, LLC, in an amount not to exceed $88,500.00, upon presentation of a duly certified claim, after audit, and the funds for said payment shall be drawn from account No. PAD B 8020 44800 000 0000.

#

The foregoing resolution was declared adopted after a poll of the members of the Board, the vote being recorded as follows:

Supervisor Saladino	Aye
Councilman Muscarella	Aye
Councilman Macagnone	Aye
Councilwoman Alesia	Aye
Councilwoman Johnson	Recused
Councilman Imbroto	Aye
Councilman Hand	Aye

cc: Supervisor
Town Attorney
Comptroller
Planning & Development

NELSON, POPE & VOORHIS, LLC
ENVIRONMENTAL • LAND USE • PLANNING
www.nelsonpopevoorhis.com

June 27, 2019

Commissioner Leslie Maccarone
Town of Oyster Bay
Department of Planning & Development
74 Audrey Avenue
Oyster Bay, NY 11771

RE: Hicksville Downtown Code Amendments
Proposal for Additional Planning Services

Dear Commissioner Maccarone:

As you know, NPV has been assisting the Town of Oyster Bay Department of Planning and Development by providing consulting services related to preparation of zoning code amendments to support the redevelopment of Downtown Hicksville as envisioned in the DRI Plan. NPV has completed various tasks and is continuing to work with the Town in the development of draft code provisions. NPV has participated in frequent working meetings and has provided draft maps, code sections and parking/use tables, all which have been modified during the course of our work with the Town. At this time, there are a number of draft components which, with fine-tuning, will form the basis of the Hicksville Downtown code. However, the original budget has been expended and additional budget is required to continue work on the code and design standards, as well as to provide additional services that have been identified. During the course of the project, NPV has provided support to P&D in development of the code, and the group has accomplished a great deal including:

1. Determination that the entire CB District will be rezoned. The majority of the areas within the current CB District will be rezoned to three new zoning subdistricts – Hicksville Downtown (HD) HD -I, HD-II and HD-III and other areas will be rezoned to GB or NB. In addition, two areas adjacent to the current CB District, on zoned LI and one zoned R1-6 will be included within the HD Districts. The area along West John Street zoned LI will be rezoned to HD-I and the area on the north side of East John Street, currently zoned R1-6 will be rezoned to HD-III to allow redevelopment with attached townhomes. Currently the south side of East John Street is zoned CB and will also be rezoned to HD-III.
2. The committee has identified street types which will determine the width of sidewalks, landscape/utility area, building frontage zone, and identified how buildings will relate to the street and where storefront uses on the ground floor will be required.
3. A use table has been created to identify permitted and special use permit uses for the three new subdistricts.
4. New definitions have been created specific to the HD Districts.
5. Minimum development standards have been identified to encourage sustainable building practices.
6. A draft code document has been prepared.

Based upon our more recent discussions, we believe that the following additional services are required at this time:

LONG ISLAND OFFICE
572 WALT WHITMAN ROAD, MELVILLE, NY 11747-2188
PHONE: (631) 427-5665 • FAX: (631) 427-5620

HUDSON VALLEY OFFICE
156 Route 59, Suite C6, SUFFERN, NY 10901
PHONE: (845) 368-1472 • FAX: (845) 368-1572

1. Participation in several additional working meetings will be required to fine-tune the code provisions and achieve consensus so that NPV may finalize the recommended code document.

   Budget: $ 8,550.00

2. Utilizing the input received from Town P&D and Economic Development, NPV will finalize the draft Hicksville Downtown code sections for incorporation into the Town Zoning Code.

   Budget: $10,300.00

3. Design guidelines have been preliminarily discussed and additional feedback is required to verify those building types and styles which should be encouraged in Downtown Hicksville to allow NPV to create guidelines for incorporation into the code in a way that encourages high quality and aesthetically pleasing architecture and building arrangements. It is proposed that NPV create a visual preference slideshow and host conference call via skype so that attendees can see the imagery and react to each image. Based upon the input received, NPV will provide guidance using photographs and sketches where appropriate to provide visual guidance to developers and create an attachment to the Hicksville Downtown code section. These basic guidelines will be used in Site Plan Review process by P&D and where needed by the Town Board for those uses requiring a special permit.

   Budget: $7,950.00

4. A draft local law is required to facilitate adoption of the Hicksville Downtown Code amendments and Zoning Map Amendments. The preparation of the local law will require a comprehensive review of each section of the Town Zoning Code, as well as related sections to identify where edits are required, identify where existing provisions will/will not apply and provide appropriate references. An attachment will be provided to provide the dimensional regulations, design guidelines, uses and additional development standards for the HD Districts.

   Budget: $8,150.00

Thank you for the opportunity to submit this proposal for planning services. We look forward to continuing to work with the Town on this important project. If you have any questions or would like to discuss the proposal, please do not hesitate to contact me.

Respectfully submitted,

NELSON, POPE & VOORHIS, LLC

Kathryn J. Eiseman, AICP

Reviewed By
Office of Town Attorney

WHEREAS, by Resolution No. 867-2017, adopted on December 12, 2017, the Town Board authorized and directed D & B Architects and Engineers, P.C., 330 Crossways Park Drive, Woodbury, New York 11797, to provide the Town of Oyster Bay with On-Call Engineering Services under Contract No. PWC31-18, On-Call Engineering Services to the Town Relative to the Operation and Development of the Old Bethpage Solid Waste Disposal Complex, for a two (2) year contract term, from January 1, 2018 through December 31, 2019; and

WHEREAS, in connection with Contract No. PWC31-18, John C. Tassone, Deputy Commissioner of the Department of Public Works, by memoranda dated November 1, 2019, and November 7, 2019, requests that the Town Board authorize and direct the Comptroller to issue an encumbrance order in the amount of $38,000.00, for work to be performed under said Contract, including research and preparation of the Request for Proposals (RFP) for the transfer and disposal of the Town of Oyster Bay's municipal solid waste,

NOW, THEREFORE BE IT RESOLVED, that the abovementioned request is hereby accepted and approved, and in connection with Contract No. PWC31-18, the Comptroller is hereby authorized and directed to issue an encumbrance order in the amount of $38,000.00, for work to be performed under said Contract; and be it further

RESOLVED, that the funds for said payment shall be drawn from Account No. DER SR05 8160 44800 000 0000; and be it further

RESOLVED, that the Comptroller is hereby authorized and directed to make payment for same, upon submission of a duly certified claim, after audit.

-#-

The foregoing resolution was declared adopted after a poll of the members of the Board; the vote being recorded as follows:

Supervisor Saladino	Aye
Councilman Muscarella	Aye
Councilman Macagnone	Aye
Councilwoman Johnson	Aye
Councilman Imbroto	Aye
Councilman Hand	Aye
Councilman Labriola	Aye

35

TOWN OF OYSTER BAY

INTER-DEPARTMENTAL MEMO

NOVEMBER 1, 2019

TO: MEMORANDUM DOCKET

FROM: JOHN C. TASSONE, DEPUTY COMMISSIONER
DEPARTMENT OF PUBLIC WORKS/HIGHWAY

SUBJECT: ON-CALL ENGINEERING SERVICE REQUEST
OPERATION AND DEVELOPMENT OF THE
OLD BETHPAGE SOLID WASTE DISPOSAL COMPLEX
CONTRACT NO. PWC31-18
SUPPLEMENTAL MEMO TO FOLLOW

The Division of Engineering is compiling the necessary paperwork for an on-call consultant service request authorization for D & B Engineers and Architects for services under On-Call Engineering Services Relative to Operation and Development of the O.B.S.W.D.C, Contract No. PWC31-18. Additional information will be provided by supplemental docket memo.

It is hereby requested that a space be reserved at the Town Board meeting of November 19, 2019 for the Town Board to act on a request for authorization under Contract No. PWC31-18, On-Call Engineering Services Relative to Operation and Development of the O.B.S.W.D.C.

JOHN C. TASSONE
DEPUTY COMMISSIONER
DEPARTMENT OF PUBLIC WORKS

RWL/JCT/MR/mr

Attachment

c: Office of the Town Attorney (w/9 copies)
Steven Ballas, Comptroller
George Baptista, Deputy Commissioner/Environmental Resources
Kathy Stefanich, Administrative Division/DPW

PWC31-18 D&B DOCKET SWTF FUNDS RESERVE

27

TOWN OF OYSTER BAY

INTER-DEPARTMENTAL MEMO

NOVEMBER 7, 2019

TO : MEMORANDUM DOCKET

FROM : JOHN C. TASSONE, DEPUTY COMMISSIONER
DEPARTMENT OF PUBLIC WORK

SUBJECT : SUPPLEMENTAL DOCKET MEMO TO ITEM NO. 35
DOCKET OF NOVEMBER 5, 2019
ON-CALL CONSULTANT SERVICE REQUEST
CONTRACT NO. PWC31-18
OPERATION AND DEVELOPMENT OF THE OLD BETHPAGE
SOLID WASTE DISPOSAL COMPLEX
ACCOUNT NO.: DER SR05 8160 44800 000 0000

In furtherance to Item No. 35 of the docket of November 5, 2019, the consultant, D&B Engineers & Architects, has been approved by the Commissioner of Public Works to provide technical services under On-Call Contract No. PWC31-18 by Resolution No. 867-2017for the subject project. Funds have been made available by the Director of Finance.

Attached is a letter dated September 30, 2019 from D&B Engineers & Architects, regarding the scope of work to be performed in an amount not to exceed $38,000.00. Services to be provided include research and preparation of the Request for Proposals (RFP) for the transfer and disposal of the Town's municipal solid waste.

Attached is an availability of funds in the amount of $38,000.00 to satisfy said engineering costs from the Office of the Director of Finance indicating that funds are available in Account No. DER SR05 8160 44800 000 0000.

It is hereby requested that the Town Board authorize, by Resolution, D&B Engineers & Architects under Contract No. PWC31-18, On-Call Engineering Services relative to Operation and Development of the Old Bethpage Solid Waste Disposal Complex, and requests that the Comptroller be directed to issue an encumbrance order for this purpose.

JOHN C. TASSONE
DEPUTY COMMISSIONER
DEPARTMENT OF PUBLIC WORKS

RWL/JCT/MR/lk

Attachment

cc: Office of the Town Attorney (w/9 copies)
Steven Ballas, Comptroller
George Baptista, Deputy Commissioner/Environmental Resources
Kathy Stefanich, Administrative Division/DPW

PWC31-18 D&B DOCKET RFP FUNDS SUPP

ON-CALL CONSULTANT SERVICE / REQUIREMENTS CONTRACT
REQUEST FOR AVAILABILITY OF FUNDS

Requesting Division/Department ENVIRONMENTAL RESOURCES

THIS SECTION TO BE COMPLETED BY DEPARTMENT ADMINISTERING ON-CALL CONSULTANT CONTRACT

Contract Number PWC31-18

Contract Period JANUARY 1, 2018 - DECEMBER 31, 2019

Consultant/Contractor D & B ENGINEERS & ARCHITECTS

Discipline OPERATION AND DEVELOPMENT OF THE O.B.S.W.D.C.

Total Authorization $58,000.00

Resolution No. 867-2017 Date 12/12/2017

Funded To Date $20,000.00

Amount Requested $38,000.00

Account To Be Used DER SR05 8160 44800 000 0000

If Capital Account, State The Related Contract Number:

Description Of Work

If a Capital Account is used and work is not related to a Capital Project, specify the nature of the requested service that qualifies it as a Capital Expense.

SERVICES FOR THE DEVELOPMENT OF RFP/BID

DOCUMENTS FOR TRANSFER, HAUL & DISPOSAL OF MSW

Work To Be Completed In Contract Period: *Yes* [X] *No* [ ]

A "No" response will require Town Board authorization to extend the contract period.

Required Insurances Are In Effect: *Yes* [X] *No* [ ]

A "No" response will prevent further processing of this form.

Required 50% Performance Bond For This Request In Effect: *Yes* [ ] *No* [ ] *N/A* [X]

Amount of Bond $

Requesting Division/Department	DPW Approval Only To Be Executed By The Commissioner
Signature	Signature
Title DEPUTY COMMISSIONER	Title **Commissioner of Public Works**
Date Nov 4, 2019	Date 11-6-19

THIS SECTION TO BE COMPLETED BY THE DIRECTOR OF FINANCE

Amount Requested 38,000.00

Unemcumbered Balance 187,150.17

Is The Account To Be Used Consistent With The Nature Of Work Listed Above? *Yes* [X] *No* [ ]

Signature Date 11/7/19

TOWN OF OYSTER BAY

WORK ORDER

This Section To Be Completed By The Department Of Public Works

Work Order No. _____ E.O. No. _____

Contract Start 1/1/2018

Contract No. PWC31-18 Contract End 12/31/2019

Commencement Date 1/1/2019

No claim shall be paid for work performed prior to the Commencement Date

Vendor Name and Address

D & B ENGINEERS & ARCHITECTS

330 CROSSWAYS PARK DRIVE

WOODBURY, NEW YORK 11797

Requesting Town Department ENVIRONMENTAL RESOURCES

Contact MATTHEW RUSSO, P.E. Phone 516-677-5719

Description of Work to be Performed (Attach Detail If Necessary)

SERVICES FOR THE DEVELOPMENT OF RFP/BID

DOCUMENTS FOR TRANSFER, HAUL & DISPOSAL OF MSW

This work order shall not exceed $ 38,000.00

Please notify the above mentioned contact person 48 hours prior to commencing any work.

Requesting Division/Department

Signature

Title DEPUTY COMMISSIONER

Date NOV 4, 2019

Department Of Public Works Approval

Only To Be Executed By The Commissioner

Signature

Commissioner of Public Works

Date 11-6-19

D&B ENGINEERS AND ARCHITECTS, P.C.

330 Crossways Park Drive, Woodbury, New York 11797
516-364-9890 • 718-460-3634 • Fax: 516-364-9045 • www.db-eng.com

September 30, 2019

Richard W. Lenz, P.E., Commissioner
Department of Public Works
Town of Oyster Bay
150 Miller Place
Syosset, NY 11791

Re: On-Call Engineering Services for the Operation and Development of the Old Bethpage Solid Waste Disposal Complex (OBSWDC)
Solid Waste 1 Task Force
TOB Contract No. PWC 31-18

Dear Commissioner Lenz:

As part of the Town of Oyster Bay's (the Town's) Solid Waste Management Task Force, D&B Engineers and Architects, P.C. (D&B) is pleased to provide this proposal for engineering services through the December 31, 2019 term of our On-Call Engineering Services Contract referenced above. D&B has met with the consultant team members and is prepared to assist with the procurement effort for several solid waste handling, recycling and disposal services related to the expiration of existing contracts. The waste types subject to the procurement are: Municipal Solid Waste (MSW); recyclables; e-waste; yard waste; white goods; tires; and household hazardous waste. As part of this procurement, the Town is considering the redevelopment of the Oyster Bay Solid Waste Disposal Complex (OBSWDC) including the demolition and replacement of existing facilities such as the transfer station and recycling facility. The demolition and construction would be the responsibility of the contractor(s) selected through the procurement. D&B has met with the team to discuss the procurement and redevelopment project and the respective roles of each firm. Based upon that discussion, D&B is proposing to carry out the following scope of work to be completed within the remaining term of the above on-call contract.

SCOPE

Transfer Station and Recycling Facility Condition Assessment and Recommendations

A determination is needed on whether to repair or demolish and reconstruct the transfer station and recycling facility. Based upon our past experience and familiarity with this facility, D&B will conduct a condition assessment of the facility to estimate repair and replacement costs. The assessment will update the latest assessment conducted in April of 2011 by D&B and will include recommendation regarding whether to repair or demolish and replace the facility. This will include cost estimates and life expectancies for each option. An estimate for the cost to replace the facility will assume that it is located on the same location at the OBSWDC and can be adjusted in the future to evaluate alternative facility locations on the property under separate scope, as may be necessary.

Assistance in the Development of the Procurement Document and Planning for the OBSWDC Redevelopment

Details regarding the Town's objectives and requirements for the redevelopment of the OBSWDC must be included in the procurement document. The details that should be included in the procurement document include, but are not limited to, those listed in our September 30, 2019 Task Force memorandum. D&B will assist the Town and the team in identifying and reviewing the issues and in providing requirements associated with each. D&B will participate in meetings and prepare memorandums pursuant to this assignment. Effort related to surveys, reports or designs which may be necessary for inclusion in the procurement document are not included, but can be estimated as necessary through the procurement document development.

FEES

The proposed fees to complete the above tasks will be based upon time and expenses actually incurred in relation to the above scope in accordance with the terms of our on-call agreement with the Town and will not exceed the following values:

Condition Assessment	$30,000
Procurement Document and OBSWDC Redevelopment Assistance	$8,000
Total	**$38,000**

Direct expenses, including mileage and document reproduction are included in the above fees.

We look forward to continuing to support the Town's solid waste procurement effort as part of the Task Force, including technical support relative to the development of Request for Proposals from MSW operators.

If you have any questions or wish to discuss this further, please feel free to contact the undersigned at (516) 364-9890, Ext. 3005.

Very truly yours,

Steven A. Fangmann, P.E.
President and CEO

SAF/PRS/kb
cc: John Tassone, Deputy Commissioner DPW (TOB)
Matthew Russo, Engineering (TOB)
♦PX10373\SAF093019RL-Ltr(R01)

Meeting of December 12, 2017 Resolution No. 867-2017

Reviewed By
Office of Town Attorney

WHEREAS, Richard W. Lenz, P.E., Commissioner, Department of Public Works, by memoranda dated November 27, 2017 and December 4, 2017, advised that the Department of Public Works issued a Request for Proposal to firms seeking to provide On-Call Engineering Services to the Town relative to Operation and Development of the Old Bethpage Solid Waste Disposal Complex, resulting in the receipt of three (3) submissions, and after review and analysis of the submissions based upon the technical merits of the responses has selected Cashin Associates, P.C., D&B Engineering & Architects, and Lockwood, Kessler & Bartlett, Inc., to perform On-Call Engineering Services in connection with Contract No. PWC31-18, for a two (2) year contract, from January 1, 2018 through December 31, 2019; and

NOW, THEREFORE, BE IT RESOLVED, That the request as hereinabove set forth is hereby accepted and approved and in connection with Contract No. PWC31-18, Cashin Associates, P.C., D&B Engineering & Architects, and Lockwood, Kessler & Bartlett, Inc., are hereby authorized and directed to provide On-Call Engineering Services to the Town, relative to relative to Operation and Development of the Old Bethpage Solid Waste Disposal Complex, in connection with Contract No. PWC31-18, for a two (2) year contract, from January 1, 2018 through December 31, 2019.

#

The foregoing resolution was declared adopted after a poll of the members of the Board; the vote being recorded as follows:

Supervisor Saladino	Aye
Councilman Muscarella	Aye
Councilman Macagnone	Aye
Councilwoman Alesia	Absent
Councilwoman Johnson	Aye
Councilman Imbroto	Absent
Councilman Hand	Aye

cc: Supervisor (2)
Town Attorney
Comptroller
Public Works

Meeting of November 19, 2019 Resolution No. 727-2019

WHEREAS, Frank V. Sammartano, Commissioner, Department of Intergovernmental Affairs, by memorandum dated November 8, 2019, advised that the New York State Department of Transportation ("DOT") implemented an internet based reporting system known as the Equitable Business Opportunities ("EBO") system, used to streamline reporting requirements associated with Federal and State funding provided through the DOT; and

WHEREAS, access to the EBO is achieved through the use of DOT supplied credentials following the execution of a DOT EBO System User Agreement, which must be accompanied by a municipal resolution authorizing a municipal representative to use the EBO; and

WHEREAS, Commissioner Sammartano, by the aforementioned memorandum, requested that the Town Board authorize Colin Bell, Deputy Commissioner, Department of Intergovernmental Affairs, to execute the DOT EBO System User Agreement and to serve as the Town's primary log-in holder to the EBO,

NOW, THEREFORE, BE IT RESOLVED, That the request as hereinabove set forth is accepted and approved, and Colin Bell, Deputy Commissioner, Department of Intergovernmental Affairs, is hereby authorized to execute the DOT EBO System User Agreement and to serve as the Town's primary log-in holder to the EBO.

-#-

Reviewed By
Office of Town Attorney

The foregoing resolution was declared adopted after a poll of the members of the Board; the vote being recorded as follows:

Supervisor Saladino	Aye
Councilman Muscarella	Aye
Councilman Macagnone	Aye
Councilwoman Johnson	Aye
Councilman Imbroto	Aye
Councilman Hand	Aye
Councilman Labriola	Aye

TOWN OF OYSTER BAY

INTER-DEPARTMENTAL MEMO

TO: MEMORANDUM DOCKET

THROUGH: FRANK V. SAMMARTANO, COMMISSIONER
INTERGOVERNMENTAL AFFAIRS

DATE: NOVEMBER 8, 2019

SUBJECT: NEW YORK STATE DEPARTMENT OF TRANSPORTATION
EQUITABLE BUSINESS OPPORTUNITIES: SYSTEM USER AGREEMENT

The New York State Department of Transportation (NYSDOT) has implemented a web-based civil rights reporting system called EBO (Equitable Business Opportunities). This system is used to streamline and reduce the efforts required to satisfy the civil rights reporting requirements associated with use of federal and state funding provided through NYS DOT.

Utilization of NYS DOT's EBO is necessary to complete required reporting associated with federal and state funds provided through NYS DOT. Access to EBO is contingent upon NYS DOT providing log-in credentials to a municipal representative who will be responsible for completing said reporting. NYS DOT's provision of log-in credentials to EBO is contingent upon the proposed Log-In Holder's execution of a NYS DOT Equitable Business Opportunities System User Agreement. Submission of the System User Agreement must be accompanied with a municipal resolution granting authorization of a municipal representative to serve as said Log-In Holder.

Therefore, it is respectfully requested that Colin Bell, Deputy Commissioner, Department of Intergovernmental Affairs be authorized to execute a NYS DOT Equitable Business Opportunity System User Agreement; thereby allowing for Colin Bell to serve as the Town's Primary Log-In Holder to the New York State Department of Transportation's Equitable Business Opportunities system. It is further requested that the rules be suspended and this item be placed on the calendar for the November 19, 2019 Town Board meeting.

Frank V. Sammartano
Frank V. Sammartano
Commissioner
By Colin Bell

cc: Town Attorney w/9 copies

NYSDOT EQUITABLE BUSINESS OPPORTUNITIES (EBO) SYSTEM USER AGREEMENT

This System User Agreement forms an integral part of each application to the New York State Department of Transportation (NYSDOT) for obtaining log-in/password access to the Equitable Business Opportunities (EBO) System maintained and operated by NYSDOT. By signing and submitting such an application, you agree to be bound by the terms of this System User Agreement.

This System User Agreement governs the terms and conditions upon which your municipality, and your municipality's authorized users (referred to collectively as "User") will be allowed to access and use NYSDOT's EBO System.

NYSDOT authorizes the User, and the User agrees, to access and use the EBO System solely for official business purposes associated with the User's participation in construction, consultant engineering and professional services contracts awarded by NYSDOT or other Federal Aid sub-recipients. Such purposes include the administration of civil rights requirements associated with Federal Aid projects.

NYSDOT requires, and the User agrees, that in accessing and using the EBO System, the User will comply with NYSDOT's Information Security policies, procedures and directives, to the full extent required by NYSDOT's Information Security Officer, NYSDOT's Office of Information Services (OIS), and NYSDOT's EBO System Administrator. Such policies and requirements include the following:

1) The User's Primary Log-in ID Holder shall be personally responsible for usage of NYSDOT's EBO System by any and all of the User's other authorized users, including compliance with this System User Agreement and NYSDOT Information Security requirements, and shall exercise oversight over usage of the EBO System by such other authorized users.

2) The User will access and use the EBO System solely for the official business purposes indicated above. The User will not use access to the EBO System to access or use any other portion of NYSDOT's information technology (IT) Systems.

3) The User will maintain the confidentiality and security of the User's EBO System log-in ID and password, will provide such password only to authorized users within the User's business organization, and will not disclose such password to any persons other than authorized users who are officers or employees of the User.

4) The User's Primary Log-in Holder shall promptly deactivate the system access of any former employee, or other formerly authorized user, whom the User no longer authorizes to have access to the EBO System.

5) The User shall maintain the confidentiality and security of the Social Security Numbers (SSNs) of the User's employees, and any other confidential information obtained or submitted to NYSDOT in connection with use of the EBO System.

WHEREAS, the Town of Oyster Bay was awarded a $1,496,954.00 Transportation Enhancement Program grant through the New York State Department of Transportation (the "DOT") for the Syosset Streetscape and Walkability Enhancement Project (the "Project"); and

WHEREAS, by Resolution No. 742-2009, adopted on September 15, 2009, the Town Board authorized the Town to enter into a grant agreement with the DOT in connection the Project, which agreement is due to expire on December 31, 2019; and

WHEREAS, Frank V. Sammartano, Commissioner, Department of Intergovernmental Affairs, by memorandum dated November 8, 2019, advised that the DOT has offered to enter into a No Cost Time Extension to the Grant Agreement, which extension would expire on December 31, 2024; and

WHEREAS, Commissioner Sammartano requests that the Town Board authorize the Supervisor, or his designee, to execute the No Cost Time Extension to the Grant Agreement in order to permit the completion of the Project,

NOW, THEREFORE, BE IT RESOLVED, That the request as hereinabove set forth is accepted and approved, and the Supervisor, or his designee, is hereby authorized to execute a No Cost Time Extension to the Grant Agreement in connection with the Syosset Streetscape and Walkability Enhancement Project.

-#

Reviewed By
Office of Town Attorney

The foregoing resolution was declared adopted after a poll of the members of the Board; the vote being recorded as follows:

Supervisor Saladino	Aye
Councilman Muscarella	Aye
Councilman Macagnone	Aye
Councilwoman Johnson	Aye
Councilman Imbroto	Aye
Councilman Hand	Aye
Councilman Labriola	Aye

12

TOWN OF OYSTER BAY

INTER-DEPARTMENTAL MEMO

TO: MEMORANDUM DOCKET

THROUGH: FRANK V. SAMMARTANO, COMMISSIONER
INTERGOVERNMENTAL AFFAIRS

DATE: NOVEMBER 8, 2019

SUBJECT: SYOSSET STREETSCAPE AND WALKABILITY ENHANCEMENT PROJECT
NO COST TIME EXTENSION

The Town of Oyster Bay (Town) has been awarded a $1,496,954.00 Transportation Enhancement Program grant through the New York State Department of Transportation (NYS DOT). This funding is approved to be applied to the provision of decorative crosswalks, street lighting, landscaping and the installation of ADA compliant ramps along Jackson Avenue, East Woods Road, Berry Hill Road, Cold Spring Harbor Road and Underhill Boulevard (Project).

Resolution number 742-2009 (enclosed) authorized the Town to enter into a Grant Agreement with NYS DOT relative to the above referenced Project. Currently this Grant Agreement is set to expire on December 31, 2019. NYS DOT has offered the Town the opportunity to execute a No Cost Time Extension to the Grant Agreement through December 31, 2024 in order to complete the Project. Design work relative to this Project has been completed and construction is anticipated to commence in Spring, 2020.

Therefore, it is respectfully requested that the Town Board authorize the Supervisor and/or his authorized designee to execute a No Cost Time Extension of Local / Miscellaneous Contract relative to the above referenced Grant Agreement. It is further requested that the rules be suspended and this item be placed on the calendar for the November 19, 2019 Town Board meeting.

Frank V. Sammartano

Frank V. Sammartano
Commissioner
By Corin Bell

cc: Town Attorney w/9 copies
Richard Lenz, P.E., Commissioner, Department of Public Works/Highway

RESOLUTION NO. 742-2009

Meeting of September 15, 2009

WHEREAS, John Canning, Commissioner of the Department of Intergovernmental Affairs, and Jon Klein, Assistant Director, Federal & State Aid, Department of Intergovernmental Affairs, by memorandum dated August 17, 2009, request Town Board authorization for the Supervisor to enter into a grant agreement with the New York State Department of Transportation (NYSDOT) for a grant award which the Town shall utilize for the Syosset Streetscape Project, to add and improve crosswalks, with brick pavers or similar material, to install decorative lighting, to create green spaces and other landscaping , to replace concrete sidewalks with brick paving stones and to add benches, trash receptacles, information kiosks and bicycle lockers near the train station; and

WHEREAS, John Canning, Commissioner of the Department of Intergovernmental Affairs, and Jon Klein, Assistant Director, Federal & State Aid, Department of Intergovernmental Affairs, by memorandum dated August 17, 2009, further request that the Town Board authorize the Supervisor and the Town Attorney to sign and execute all papers and documents pertaining to the aforementioned grant agreement; and

WHEREAS, Town Board approval is requested, with regard to the aforementioned grant, for the implementation, and funding in the first instance, one-hundred percent (100%) of the federal aid and State "Marchiselli" Program aid eligible costs, of a transporation federal aid project and the approaching funds therefore; and

WHEREAS, a Project for the Syosset Streetscape (P.I.N. 0759.59) (the "Project") is eligible for funding under Title 23 U.S. Code, as amended, that calls for the apportionment of the costs such program to be borne at the ratio of eighty percent (80%) federal funds and twenty percent (20%) non-federal funds; and

WHEREAS, the Town of Oyster Bay desires to advance the Project by making a commitment of one-hundred percent (100%) of the non-federal share of the costs of the Syosset Streetscape Project,

NOW, THEREFORE, The Town Board duly convened does hereby

RESOLVE, That the Town Board hereby approves the above-subject project; and be it further

RESOLVED, That the Town Board hereby authorizes the Supervisor of the Town of Oyster Bay to pay in the first instance, one-hundred percent (100%) of the federal and non-federal share of the cost of the design and construction work for the Project or portions thereof; and be it further

RESOLVED, That the sum of one million five hundred and seventy five thousand dollars ($1,575,000) is hereby appropriated from the Town Capital Program, and made available to cover the cost of participation in the above phase of the Project; and be it further

Reviewed By
Office of Town Attorney

RESOLVED, That in the event the full federal and non-federal share costs of the project exceeds the amount appropriated above, the Town Board of the Town of Oyster Bay shall convene as soon as possible to appropriate said excess amount immediately upon the notification by the NYSDOT thereof; and be it further

RESOLVED, That the Supervisor and Town Attorney of the Town of Oyster Bay are hereby authorized to execute all necessary Agreements, certifications or reimbursement requests for Federal Aid and/or Marchiselli Aid on behalf of the Town with the NYSDOT, in connection with the advancement of approval of the Project and providing for the administration of the Project and the Town's first instance funding of project costs and permanent funding of the local share of federal aid and state aid eligible Project costs and all Project costs within appropriations therefore that are not so eligible; and be it further

RESOLVED, That a certified copy of this Resolution shall be filed with the New York State Commissioner of Transportation by attaching it to any necessary Agreement in connection with the Project; and be it further

RESOLVED, That this Resolution shall take effect immediately.

The foregoing resolution was declared adopted after a poll of the members of the Board; the vote being recorded as follows:

Supervisor Venditto	Aye
Councilman Muscarella	Aye
Councilman Macagnone	Absent
Councilman Coschignano	Aye
Councilwoman Walker	Absent
Councilwoman Faughnan	Aye
Councilman Pinto	Aye

cc: Supervisor (2)
Town Attorney
Comptroller (2)
IGA
Councilman Coschignano
DPW

NO-COST TIME EXTENSION OF LOCAL/MISCELLANEOUS CONTRACT

NOTE: ***If there is a current Federal-Aid (FA) Authorization period from: MM/DD/YYYY to MM/DD/YYYY in the FA project description, a modified FA Authorization must be requested/submitted immediately.***

DATE: 09/26/2019 CONTRACT #: D032278 PIN 0759.59

PROJECT: Syosset Streetscape and Walkability Improvement

In the County of Nassau

Municipality/Sponsor: Town of Oyster Bay

Office Address: Dept. of Intergovernmental Affairs, Town of Oyster Bay,
977 Hicksville Road, Massapequa, NY 11758

Original Contract Period From: 09/22/2009 to 06/30/2013

Current Completion Date: 12/31/2019

Requested Extended Contract Completion Date: 12/31/2024

If applicable, Current Federal-Aid Authorization Period From: MM/DD/YYYY to MM/DD/YYYY

Reason (s) for extension: (See Attachment)
Attach additional sheet if necessary_____

Agreed to by _____ Date _____
Municipality/Sponsor

STATE OF NEW YORK)
)ss.:
COUNTY OF *Nassau*)

On this _____ day of _____, 20___ before me personally came _____ to me known, who, being by me duly sworn did depose and say that he/she resides at _____; that he/she is the _____ of the Municipal/Sponsor Corporation described in and which executed the above instrument; (except New York City) that it was executed by order of the _____ of said Municipal/Sponsor Corporation; and that he signed his name thereto by like order.

_____
Notary Public

Recommended by _____ Date _____
NYSDOT Project Manager

Approved by _____ Date _____
NYSDOT Contract Management Bureau

WHEREAS, Joseph G. Pinto, Commissioner, Department of Parks, by memorandum dated November 7, 2019, requested authority to expend funds to cover costs of work to be performed by the LandTek Group, Inc., for Project ID No.1902PKSA-03, for the replacement of the back softball artificial turf fields at John J. Burns Park, Massapequa; and

WHEREAS, the Parks Department will be utilizing Nassau County Contract General Requirements Contract No. H66302V, which has a stipulation that allows for use by other political subdivisions; and

WHEREAS, funds in the amount of $90,031.00 are available for this purpose, within Account No. PKS-H-7197-20000-000-1902-001, and it is further requested that the Comptroller issue an encumbrance order for this amount,

NOW, THEREFORE, BE IT RESOLVED, That the requests as hereinabove set forth are accepted and approved and LandTek Group, Inc., is hereby authorized to proceed with the abovementioned services, and the Comptroller is hereby authorized and directed to issue an encumbrance order of $90,031.00 for Contract No. H66302V, with funds to be drawn from Account No. PKS-H-7197-20000-000-1902-001.

-#-

Reviewed By
Office of Town Attorney

The foregoing resolution was declared adopted after a poll of the members of the Board; the vote being recorded as follows:

Supervisor Saladino	Aye
Councilman Muscarella	Aye
Councilman Macagnone	Aye
Councilwoman Johnson	Aye
Councilman Imbroto	Aye
Councilman Hand	Aye
Councilman Labriola	Aye

32.

TOWN OF OYSTER BAY

Inter-Departmental Memorandum

TO: Memorandum Docket

FROM: Joseph G. Pinto, Commissioner
Department of Parks

DATE: November 7, 2019

SUBJECT: Account No. PKS-H-7197-20000-000-1902-001
Project ID No. 1902PKSA-03
Nassau County Contract No. H66302V
LandTek Group, Inc.

The Department of Parks respectfully requests to expend funds from within the above noted Project I.D. No. and Account.

These funds are required to cover costs of work to be performed by the LandTek Group, Inc., for the replacement of the back softball artificial turf at John J. Burns Park located in Massapequa.

The Parks Department will be utilizing Nassau County Contract General Requirements Contract No. H66302V, which has a stipulation, that allows for use by other political subdivisions.

Funds in the amount of $90,031.00 are available for this purpose. Attached please find a copy of the availability of funds within Account No. PKS-H-7197-20000-000-1902-001.

The Parks Department also requests that the Office of the Town Comptroller, issue an encumbrance order in the requested amount for the LandTek Group, Inc.

Therefore, it is hereby recommended that Town Board authorize this request relative to the above noted account.

Please suspend all rules and put on calendar for the November 19, 2019, Town Board Meeting.

Joseph G. Pinto
Commissioner

GJP:ld
Attachments
cc: Gregory J. Skupinsky, Deputy Commissioner, Department of Parks
cc: Town Attorney (original + 9 copies)

235 COUNTY LINE ROAD, AMITYVILLE, NY 11701
OFFICE (631) 691-2381 • FAX (631) 598-8280

November 4, 2019

Town of Oyster Bay
977 Hicksville Road
Massapequa NY 11758
Attn: Frank Gatto

Proposal # 19-1272

Re: John J Burns Park Softball Infield Field Turf Replacement

Dear Frank,

Thank you for allowing The LandTek Group the opportunity to provide you with a proposal for the following scope of work off of the Nassau County General Requirements Contract #H66302V.

Scope of Work:

- Remove and dispose of existing synthetic turf.
- Laser grade and compact existing stone base.
- Install 12,585 square feet of infilled synthetic turf.
- Perform one (1) G-max test.

Total Price: $90,031.00

The total price for the work outlined above does not include tax (provided we receive a tax-exempt certificate or a capital improvement certificate).

Exclusions:

- Permit fees, inspection fees.
- Architectural & engineering fees.
- Any applicable taxes, bonding fees.
- Any work not specifically detailed in the above scope of work shall be excluded.

If you have any questions, or if I can be of further assistance, please do not hesitate to reach out to me.
Thank you,

Sincerely,

Mike Ryan
President
The LandTek Group, Inc.
631-691-2381
mryan@landtekgroup.com

235 COUNTY LINE ROAD, AMITYVILLE, NY 11701
OFFICE (631) 691-2381 • FAX (631) 598-8280

County of Nassau - Department of Public Works
General Requirements Contract for Various Civil/Site Reconstruction
Contract Number H66302V

Item No.	Description	Qty	UoM	Unit Price	Extension
363	Grass Seeding	220	SY	4.00	880.00
368	Topsoil & Grass Seed	165	SY	10.00	1,650.00
751	Synthetic Turf Field w/ Underdrain - Discounted For Reuse of Existing Base	12585	SF	5.60	70,476.00
753	Sports Field Striping	365	LF	20.00	7,300.00
754	Custom Logos, Numbers, & Lettering - Base Cut Outs	255	SF	35.00	8,925.00
758	G-MAX Testing	1	EA	800.00	800.00
					90,031.00

2017 General Requirements Contract For Various Civil/Site Reconstruction Highways, Drainage, Bridges, Site, Parking Lots And Park Related Specialized Items
Nassau County, New York

CONTRACT NO. H66302V

SPECIAL PROVISIONS

1. Past History

To assist you in the bid process, we have reviewed the County's recent past history of expenditures for the nature of the work being bid herein. Our records have indicated that an average amount in excess of $8,000,000.00 worth of work has been accomplished under the past few contracts. It is understood and agreed, however, that this allocated amount may be amended if budgetary allowances in said sums are not voted on and approved by the Nassau County Legislature for the County fiscal years in which said payments are to be made. Be advised that this figure is provided for your guidance only and is not to be interpreted as an indication that any specific dollar amount of work is contemplated through the establishment of the contract being bid at this time.

2. POLITICAL SUBDIVISON

a. The Bidder agrees in submitting a bid that political subdivisions of New York State, either whole or partly within Nassau County, where applicable by law, will be permitted to participate in this contract per the same terms and conditions stated within. These subdivisions will be wholly responsible for any and all debts incurred by them as participants in this contract.

b. Political subdivisions are defined as towns, incorporated villages, school districts, fire districts and library districts.

ON-CALL CONSULTANT SERVICE / REQUIREMENTS CONTRACT
REQUEST FOR AVAILABILITY OF FUNDS

Requesting Division/Department _____

THIS SECTION TO BE COMPLETED BY DEPARTMENT ADMINISTERING ON-CALL CONSULTANT CONTRACT

Contract Number: NASSAU COUNTY GENERAL REQUIREMENTS CONTRACT NO. H66302V

Contract Period: _____

Consultant/Contractor: THE LANDTEK GROUP, INC

Discipline: _____

Total Authorization: $90,031.00

Resolution No. _____ Date _____

Funded To Date: _____

Amount Requested: $90,031.00

Account To Be Used: PKS-H-7197-20000-000-1902-001 ID 1902PKSA-03

If Capital Account, State The Related Contract Number: NCC. H66302V

Description Of Work

If a Capital Account is used and work is not related to a Capital Project, specify the nature of the requested service that qualifies it as a Capital Expense.

REPLACEMENT OF ARTIFICIAL TURF AT JOHN BURNS PARK BACK SOFTBALL FIELD

Work To Be Completed In Contract Period: *Yes* [X] *No* [ ]

A "No" response will require Town Board authorization to extend the contract period.

Required Insurances Are In Effect: *Yes* [X] *No* [ ]

A "No" response will prevent further processing of this form.

Required 50% Performance Bond For This Request In Effect: *Yes* [ ] *No* [ ] *N/A* [ ]

Amount of Bond $ _____

Requesting Division/Department	**DPW Approval** Only To Be Executed By The Commissioner
Signature: [signature]	Signature: _____
Title: COMMISSIONER OF PARKS	Title: _____
Date: 11/8/2019	Date: _____

THIS SECTION TO BE COMPLETED BY THE DIRECTOR OF FINANCE

Amount Requested: 90,031.00

Unencumbered Balance: 511,000.00

Is The Account To Be Used Consistent With The Nature Of Work Listed Above? *Yes* [X] *No* [ ]

Signature: [signature] Date: 11/8/19

Reviewed By
Office of Town Attorney

WHEREAS, by Resolution No. 69-2016, adopted on February 23, 2016, the Town Board authorized the retention of the law firm Bisceglie & Associates, P.C., 112 Madison Avenue, New York, NY 10016, to provide labor counsel services; and

WHEREAS, John Canning, Commissioner of Human Resources, by memorandum dated November 14, 2019, requested that Resolution No. 69-2016, be amended to provide an additional amount not to exceed $1,912.50, to satisfy 2018 invoices,

NOW, THEREFORE, BE IT RESOLVED, That Town Board Resolution No. 69-2016 be amended to increase the authorized fees of Bisceglie & Associates, P.C., in an amount not to exceed $1,912.50, including expenses and disbursements; and be it further

RESOLVED, That the Comptroller is hereby authorized and directed to make payment from Account No. TWN AMW 9040 84040 000 0000 000, upon submission of a duly certified claim, after audit.

-#-

The foregoing resolution was declared adopted after a poll of the members of the Board; the vote being recorded as follows:

Supervisor Saladino	Aye
Councilman Muscarella	Aye
Councilman Macagnone	Aye
Councilwoman Johnson	Aye
Councilman Imbroto	Aye
Councilman Hand	Aye
Councilman Labriola	Aye

36

Town of Oyster Bay
Inter-Departmental Memo

TO: Memorandum Docket

FROM: John Canning, Commissioner
Department of Human Resources

DATE: November 15, 2019

SUBJECT: Bisceglie & Associates, P.C.
Labor Counsel

The Town Board previously adopted Resolution No. 69-2016, retaining the law firm of Bisceglie & Associates, P.C., 112 Madison Avenue, New York, to provide labor counsel services.

This Office requests that the Town Board further amend Resolution 69-2016 to authorize additional funds in order to satisfy outstanding 2018 invoices in the amount of $1,912.50. Funds are available in Account No. TWN AMW 9040 84040 000 0000 000.

Accordingly, kindly suspend the rules and place this item on the November 19, 2019 action calendar.

John Canning, Commissioner

Cc: Town Attorney (with 9 copies)
Attachments

54

836

Town of Oyster Bay
Inter-Departmental Memo

TO: Memorandum Docket
FROM: John Canning, Commissioner
Department of Human Resources
DATE: November 21, 2017
RE: Labor Counsel

Town Board Resolution #69-2016 authorized the Town to enter into an Agreement with Jackson Lewis P.C., Guercio & Guercio, LLP, The Scher Law Firm, Bisceglie & Associates, P.C., and Silverman Acampora LLP, from January 1, 2016 through December 31, 2016, with two (2) one (1) year options to extend said agreement if mutually agreed upon.

This department is in receipt of letters from Jackson Lewis P.C., Guercio & Guercio, LLP, Bisceglie & Associates, P.C., and Silverman Acampora LLP stating they would like to continue providing labor counsel services for the second one (1) year extension at an amount not to exceed $50,000. Funds are available in Account TWN AMW 9040 84040 000 0000 000.

Therefore, it is respectfully requested that the Town Board authorize the second one (1) year extension of the contracts with Jackson Lewis P.C., Guercio & Guercio, LLP, Bisceglie & Associates, P.C., and Silverman Acampora LLP for the period commencing January 1, 2018 through December 31, 2018.

John Canning, Commissioner

cc: Town Attorney (with 7 Copies)
Attachments

Meeting of February 23, 2016

Resolution No. 69-2016

WHEREAS, John Canning, Commissioner of the Department of Human Resources, and Richard LaMarca, Director of Labor-Management Relations, Department of Human Resources, by memorandum dated January 26, 2016, request Town Board authorization for the Supervisor to enter into agreements with Jackson Lewis, PC, 58 South Service Road, Suite 410, Melville, New York 11747, Guercio & Guercio, LLP, 77 Conklin Street, Farmingdale, New York 11735, The Scher Law Firm, One Old Country Road, Suite 385, Carle Place, New York 11514, Bisceglie & Associates, P.C., 112 Madison Avenue, New York, NY 10016, and Silverman Acampora LLP, 100 Jericho Quadrangle, Suite 300, Jericho, New York 11753, to provide services as the Town's labor counsel, in an amount not to exceed $100,000 per year, from January 1, 2016 through December 31, 2016, with two (2), one (1) year extension options; and

WHEREAS, said services include,

1. Guidance in negotiating Collective Bargaining Agreements with Town employees' labor unions,
2. Representation on behalf of the Town in grievances submitted by Town employees,
3. Representation on behalf of the Town in disciplinary hearings based on charges proffered against Town employees,
4. Guidance to the Town on interpretation of New York State Civil Service Law in matters concerning promotion and/or discipline of employees;
5. In-house, live and possibly internet-based training for the Town of Oyster Bay employees on various employment and management related policies and topics, including but not limited to, Anti-Harassment and Anti-Violence,

Reviewed By Office of Town Attorney

NOW, THEREFORE, BE IT RESOLVED, That the abovementioned request is hereby accepted and approved, and the Supervisor is hereby authorized to enter into agreements with the aforementioned firms to provide the above services as the Town's labor counsel, in an amount not to exceed $100,000 per year, nunc pro tunc, from January 1, 2016 through December 31, 2016, with two (2), one (1) year extension options, and the Comptroller is hereby authorized and directed to make payment for same, upon presentation of a duly certified claim, after audit; and be it further

RESOLVED, That the funds for said payment shall be available from Account No. TWN AMW 9040 84040 000 0000 000, or any other appropriate account.

The foregoing resolution was declared adopted after a poll of the members of the Board; the vote being recorded as follows:

Supervisor Venditto	Aye
Councilman Muscarella	Aye
Councilman Macagnone	Aye
Councilman Coschignano	Aye
Councilman Pinto	Aye
Councilwoman Alesia	Aye
Councilwoman Johnson	Aye

cc: Supervisor
Town Attorney
Comptroller (2)
Human Resources

Meeting of December 12, 2017 Resolution No. 836-2017

Reviewed By
Office of Town Attorney

WHEREAS, by Resolution No. 69-2016, the Town Board authorized Jackson Lewis P.C., Guercio & Guercio, LLP., The Scher Law Firm, Bisceglie & Associates, P.C., and Silverman Acampora LLP., to provide labor counsel services to the Town of Oyster Bay, for the period beginning January 1, 2016 through December 31, 2016, with two (2) one (1) year extension options; and

WHEREAS, John Canning, Commissioner of the Department of Human Resources, by memorandum dated November 21, 2017, requested Town Board authorization to exercise the second extension option and extend the Agreement for one year, from January 1, 2018 through December 31, 2018, in an amount not to exceed $50,000.00; and

WHEREAS, funds for the Agreement are available in Account TWN AMW 9040 84040 000 0000 000;

NOW, THEREFORE, BE IT RESOLVED, that the recommendation as hereinabove set forth is hereby accepted and approved, and the Department of Human Resources is hereby authorized on behalf of the Town to enter into a one year extension of the Agreement with Jackson Lewis P.C., Guercio & Guercio, LLP., The Scher Law Firm, Bisceglie & Associates, P.C., and Silverman Acampora LLP., to provide labor counsel services to the Town of Oyster Bay, for the period from January 1, 2018 through December 31, 2018, in an amount not to exceed $50,000; and be it further

RESOLVED, that the Comptroller is hereby authorized to make payment for same, in accordance with the applicable terms and provisions of said agreement, upon presentation of a duly certified claim, after audit; and be it further

RESOLVED, that the funds for said payment are to be drawn from Account No. TWN AMW 9040 84040 000 0000 000.

#

The foregoing resolution was declared adopted after a poll of the members of the Board; the vote being recorded as follows:

Supervisor Saladino	Aye
Councilman Muscarella	Aye
Councilman Macagnone	Aye
Councilwoman Alesia	Absent
Councilwoman Johnson	Aye
Councilman Imbroto	Absent
Councilman Hand	Aye

cc: Supervisor (2)
Town Attorney
Comptroller
Human Resources

Meeting of November 19, 2019 Resolution No. 732-2019

Reviewed By
Office of Town Attorney
Elizabeth O. Vaughan

WHEREAS, Peter Quick, Mayor, Incorporated Village of Mill Neck, by letter dated May 14, 2019, requested to enter into an Inter-Municipal Agreement with the Town, which would provide for the Town to supply sand and salt to said Village; and

WHEREAS, John P. Bishop, Deputy Commissioner, Highway Department, by memorandum dated November 13, 2019, recommended that the Town enter into an Inter-Municipal Agreement with the Village, from November 19, 2019 to April 30, 2020, to provide sand and salt; and

WHEREAS, the Town would provide said materials to the Village on request and the Village will pay the Town at the same rate at which the Town purchased the sand and salt, at a per yard fee; and

WHEREAS, the Village will be responsible for the picking up the sand and salt, and the disposal of all any excess materials,

NOW, THEREFORE, BE IT RESOLVED, That the recommendation as hereinabove set forth is hereby accepted and approved, and the Supervisor or his designee is hereby authorized and directed to execute an Inter-Municipal Agreement with the Incorporated Village of Mill Neck to provide sand and salt, from November 19, 2019 through April 30, 2020.

-#-

The foregoing resolution was declared adopted after a poll of the members of the Board; the vote being recorded as follows:

Supervisor Saladino	Aye
Councilman Muscarella	Aye
Councilman Macagnone	Aye
Councilwoman Johnson	Aye
Councilman Imbroto	Aye
Councilman Hand	Aye
Councilman Labriola	Aye

37

Town of Oyster Bay
Inter-Departmental Memo

TO : MEMORANDUM DOCKET

FROM : Office of the Town Attorney

DATE : November 14, 2019

SUBJECT: Inter-Municipal Agreement with the Incorporated Village of Mill Neck for Sand and Salt

---

Peter Quick, Mayor, Incorporated Village of Mill Neck, by letter dated May 14, 2019, requested to enter into an Inter-Municipal Agreement with the Town which would provide for the Town to supply sand and salt to said Village from November 19, 2019 through April 30, 2020.

John P. Bishop, Deputy Commissioner, Highway Department, by memorandum dated November 13, 2019, recommended that the Town Board approve the Inter-Municipal Agreement with the Incorporated Village of Mill Neck, to provide sand and salt at the same rate of purchase as purchased by the Town, from November 19, 2019 through April 30, 2020. The Village will be responsible for picking up the sand and salt, and the disposal of all debris generated.

Attached herewith is the abovementioned Inter-municipal Agreement. Kindly suspend the rules and add this matter to the November 19, 2019, Town Board calendar.

JOSEPH NOCELLA
TOWN ATTORNEY

Elizabeth A Faughnan

Elizabeth A. Faughnan
Deputy Town Attorney

EAF:ba
Enclosure
2017-5837
cc: Town Attorney (w/9 copies)

S:\Attorney\RESOS 2019\MD & RESO\Sand and salt mix- Village Mill Neck -2019-20. EAF.docx

Reviewed By
Office of Town Attorney
Elizabeth O. Faughnan

WHEREAS, Peter Quick, Mayor, Incorporated Village of Mill Neck, by letter dated May 14, 2019, requested to enter into an Inter-Municipal Agreement with the Town, which would provide for the Town to supply sand and salt to said Village; and

WHEREAS, John P. Bishop, Deputy Commissioner, Highway Department, by memorandum dated November 13, 2019, recommended that the Town enter into an Inter-Municipal Agreement with the Village, from November 19, 2019 to April 30, 2020, to provide sand and salt; and

WHEREAS, the Town would provide said materials to the Village on request and the Village will pay the Town at the same rate at which the Town purchased the sand and salt, at a per yard fee; and

WHEREAS, the Village will be responsible for the picking up the sand and salt, and the disposal of all any excess materials,

NOW, THEREFORE, BE IT RESOLVED, That the recommendation as hereinabove set forth is hereby accepted and approved, and the Supervisor or his designee is hereby authorized and directed to execute an Inter-Municipal Agreement with the Incorporated Village of Mill Neck to provide sand and salt, from November 19, 2019 through April 30, 2020.

-#-

INTER-MUNICIPAL AGREEMENT

DATED: , 2019

PARTIES: THE TOWN OF OYSTER BAY, a municipal corporation of the State of New York, having its principal office and place of business at Town Hall, 54 Audrey Avenue, Oyster Bay, New York 11771, hereinafter referred to as the "TOWN"; and

THE INCORPORATED VILLAGE OF MILL NECK, a municipal corporation, having its principal business address at 32 Frost Mill Road, P.O. Box 351, Mill Neck, N.Y. 11765, hereinafter called the "VILLAGE",

W I T N E S S E T H:

WHEREAS, the VILLAGE has requested to enter into an Inter-Municipal Agreement with the TOWN, to purchase sand and salt for the VILLAGE to use in preparation and during snow storms; and

WHEREAS, the TOWN desires to assist the VILLAGE in its operations to provide safe and efficient road and travel conditions to our TOWN residents,

NOW, THEREFORE, IN CONSIDERATION of the mutual covenants and agreements hereinafter set forth, the parties hereto do agree as follows:

FIRST: The TOWN shall provide sand and salt to be used by the Village in preparation and during snow storms for pick-up by the VILLAGE on an "as requested" basis at the Lake Avenue Yard in Oyster Bay, the Syosset Yard in Syosset, the Glen Head Yard in Glen Head, and the Carman Mill Yard in Massapequa, N.Y.

SECOND: The VILLAGE shall be solely responsible for the disposal of all

debris and other materials as a result of the sand and salt provided by the TOWN.

THIRD: The VILLAGE agrees to pay the TOWN for such materials at the same rate at which the Town purchased the sand and salt, at a per yard fee.

FOURTH: In order to facilitate payments from the VILLAGE to the TOWN pursuant to this agreement, the TOWN shall provide an invoice to the VILLAGE on a monthly basis showing the amounts owed for the previous month. The VILLAGE agrees to pay such sums in full within thirty (30) calendar days of receipt of such invoices.

FIFTH: This agreement may be cancelled by either party upon sixty (60) days' written notice to the other party. Such notice shall be sent by certified mail, return receipt requested to the Town Attorney or Village representative, as the case may be.

SIXTH: This agreement is effective from November 19, 2019 and shall terminate on April 30, 2020 unless extended by mutual agreement between the parties.

IN WITNESS WHEREOF, the parties hereto have caused their corporate seals to be hereunto affixed and these presents to be signed by the proper officials thereof pursuant to resolutions duly adopted by the respective Boards of said parties.

TOWN OF OYSTER BAY

REVIEWED:

Elizabeth A. Laughran

Office of the Town Attorney

BY _____

INCORPORATED VILLAGE OF MILL NECK

BY: _____

Mayor

STATE OF NEW YORK)
) ss.:
COUNTY OF NASSAU)

On this day of , 2019, before me personally came _____, to me known, who, being by me duly sworn, did depose and say that he resides at _____; that he is the _____ of the Town of Oyster Bay, the municipal corporation described herein and which executed the foregoing instrument; that this agreement was authorized by order of the Town Board of said corporation, and that he signed his name thereto by like order.

_____
Notary Public

STATE OF NEW YORK)
) ss.:
COUNTY OF NASSAU)

On this day of , 2019, before me personally came _____, to me known, who, being by me duly sworn, did depose and say that he resides at _____; that he is the _____ of the INCORPORATED VILLAGE OF MILL NECK, the municipal corporation described herein and which executed the foregoing instrument; that this agreement was authorized by order of the Village Board of said corporation, and that he signed his name thereto by like order.

_____
Notary Public

S:\Attorney\AGREEMTS\Sand and Salt 2019\Sand-Salt Mill Neck Agree 2019-2020. EAF.docx

TOWN OF OYSTER BAY
INTER-DEPARTMENTAL MEMO

November 13, 2019

TO:	JOSEPH NOCELLA, TOWN ATTORNEY
ATTENTION:	PAUL EHRLICH, ASSISTANT TOWN ATTORNEY
FROM:	JOHN P. BISHOP, DEPUTY COMMISSIONER HIGHWAY DEPARTMENT
SUBJECT:	INTER-MUNICIPAL AGREEMENT WITH THE INCORPORATED VILLAGE OF MILL NECK FOR SAND & SALT FOR 2019/2020

Please see the attached correspondence from the Mayor of the Incorporated Village of Mill Neck, Peter Quick.

This request is for the Village of Mill Neck to obtain an inter-municipal agreement with the Town of Oyster Bay Highway Department to obtain sand/salt from our yards during inclement weather.

Please take whatever action you deem necessary in order to facilitate this request for an IMA and advise the Highway Department upon the proceedings.

If you have any questions regarding this, please feel free to contact me at extension 5770.

JOHN P. BISHOP, DEPUTY COMMISSIONER
HIGHWAY DEPARTMENT

JPB/km
ATT.

Incorporated Village of Mill Neck
32 Frost Mill Road- PO Box 351
Mill Neck, New York 11765
Telephone (516) 922-6722 www.millneckvillage.com Fax (516) 922-5190

May 14, 2019

Mr. John P. Bishop
Deputy Commissioner Highway Department
Town of Oyster Bay
150 Miller Place
Syosset, NY 11791

Dear Deputy Commissioner Bishop,

In continuance of our prior years' municipal agreement, this letter is confirmation of the Village's intent to continue our Sand – Salt municipal agreement with the Town of Oyster Bay.

The agreement the Village of Mill Neck currently has in effect with the Town of Oyster Bay permits our Highway Employees to pick up sand/salt at the Lake Ave Facility in preparation and during snow storms.

Please contact our office if you require any further information or if there will be any changes to this agreement.

Sincerely,

Peter Quick
Mayor

RESOLVED, That the Town Clerk is hereby authorized and directed to advertise a Notice of Hearing on the proposed rental of hydrants for the period January 1, 2019 – December 31, 2019 by the Town of Oyster Bay acting on behalf of Glenwood-Glen Head Fire Protection District and New York American Water Company, Inc., said Hearing to be held in the Hearing Room, Town Hall, East Building, 54 Audrey Avenue, Oyster Bay, New York, on December 10, 2019 at 10:00 o'clock a.m., prevailing time, said Notice to be advertised in newspapers of general circulation in the Town of Oyster Bay, pursuant to the provisions of law.

-#-

Reviewed By
Office of Town Attorney
Elizabeth A. Faughnan

The foregoing resolution was declared adopted after a poll of the members of the Board; the vote being recorded as follows:

Supervisor Saladino	Aye
Councilman Muscarella	Aye
Councilman Macagnone	Aye
Councilwoman Johnson	Aye
Councilman Imbroto	Aye
Councilman Hand	Aye
Councilman Labriola	Aye

Town of Oyster Bay
Inter-Departmental Memo

TO : MEMORANDUM DOCKET

FROM : Office of the Town Attorney

DATE : November 19, 2019

SUBJECT: January 1, 2019 – December 31, 2019 Hydrant Rental
Glenwood-Glen Head Fire Protection District and
New York American Water Company, Inc.

It is requested that at the November 19, 2019 Town Board Meeting the Town Board authorize the Town Clerk to advertise a Notice of Hearing for a public hearing on the proposed rental of fire hydrants to be held on December 10, 2019, in connection with the Town of Oyster Bay, acting on behalf of the Glenwood-Glen Head Fire Protection District and New York American Water Company, Inc.

JOSEPH NOCELLA
TOWN ATTORNEY

Elizabeth A. Faughnan

Elizabeth A. Faughnan
Deputy Town Attorney

EAF:ba
Enclosure
File 3079
cc: Town Attorney (w/9 copies)

S:\Attorney\RESOS 2019\MD & RESO\2019 Hydrant Rental-Jan - Dec 2019 Glen Head - NY American Water. eaf.doc

RESOLVED, That the Town Clerk is hereby authorized and directed to advertise a Notice of Hearing on the proposed rental of hydrants for the period January 1, 2019 – December 31, 2019 by the Town of Oyster Bay acting on behalf of Glenwood-Glen Head Fire Protection District and New York American Water Company, Inc., said Hearing to be held in the Hearing Room, Town Hall, East Building, 54 Audrey Avenue, Oyster Bay, New York, on December 10, 2019 at 10:00 o'clock a.m., prevailing time, said Notice to be advertised in newspapers of general circulation in the Town of Oyster Bay, pursuant to the provisions of law.

-#-

Reviewed By
Office of Town Attorney
Elizabeth A. Faughn

PUBLIC NOTICE
ON PROPOSED CONTRACT FOR FIRE HYDRANT RENTAL

PLEASE TAKE NOTICE That a Public Hearing will be held by the Town Board of the Town of Oyster Bay in the Hearing Room, Town Hall, East Building, 54 Audrey Avenue, Oyster Bay, New York, on Tuesday, December 10, 2019, at 10 o'clock a.m., prevailing time, at which Hearing residents and parties interested will have an opportunity to be heard on the proposed rental from New York American Water Company, Inc. of two hundred twenty-four (224) hydrants at a per annum rental fee not to exceed of One Thousand One Hundred Forty-Five Dollars and Eleven Cents ($1,145.11) per annum for a total cost not to exceed $ 256,504.64, for the period from January 1, 2019 to December 31, 2019, for the benefit of the Glenwood-Glen Head Fire Protection District. Any recognized and established fire company, companies or department, which, from time to time, may furnish fire protection to the inhabitants within the Glenwood-Glen Head Fire Protection District, or to persons having property located therein, shall be allowed to use said fire hydrants, and all necessary water which can be drawn therefrom, for the fighting and control of fires and such other purposes as are generally customarily used for fire fighting and control. BY ORDER OF THE TOWN BOARD OF THE TOWN OF OYSTER BAY. JOSEPH S. SALADINO, Supervisor. JAMES ALTADONNA, JR., Town Clerk. Dated: 2019, Oyster Bay, New York.

Reviewed By
Office of Town Attorney
Elizabeth A. Faneghan

10604814.____

At a regular meeting of the Town Board of the Town of Oyster Bay, Nassau County, New York, held at the Town Hall, Audrey Avenue, in said Town, on November 19, 2019 at 10:00 A.M., Prevailing Time.

PRESENT:

Supervisor Saladino
Supervisor

Joseph Muscarella
Councilman

Anthony Macagnone
Councilman

Michele Johnson
Councilman

Louis Imbroto
Councilman

Thomas Hand
Councilman

Steve Labriola
Councilman

Reviewed By
Office of Town Attorney

In the Matter of the Increase and Improvement of the Facilities of the Town of Oyster Bay Plainview Water District in the Town of Oyster Bay, Nassau County, New York.	:	Resolution No. 734A-2019 PUBLIC INTEREST ORDER

WHEREAS, the Town Board of the Town of Oyster Bay, Nassau County, New York (the "Town"), has been presented with a petition, dated as of October 10, 2019, executed by a majority of the duly elected Water District Commissioners of the Plainview Water District (the "District"),

consider approving the increase and improvement of the facilities of the Plainview Water District in said Town, consisting of the design, engineering, interim improvements and permanent construction of multi-year water treatment projects to treat contaminants, specifically 1,4-dioxane and per- and polyfluoroalkyl substances (PFAS), at Plants No. 2, 3, 4, and 7, including, but not limited to, the installation of Advanced Oxidative Process (AOP) treatment and Granular Activated Carbon (GAC) treatment, addition of a hydrogen peroxide system, monitoring equipment, construction of additional buildings to permanently house the GAC vessel and AOP reactor, and incidental expenses in connection therewith, and

WHEREAS, said District has prepared a map, plan and report, including an estimate of cost, relating to said increase and improvement of facilities of said Plainview Water District, in form and substance acceptable to the Town Board; and

WHEREAS, the map, plan and report is in the form of a report from H2M Architects & Engineering ("H2M"), engineers duly licensed in the State of New York, entitled "October 2019 Bond Report"; and

WHEREAS, $25,824,420 estimated maximum cost of such increase and improvement of facilities is to be borne by the Plainview Water District under a proposed issuance of up to $25,824,420 of bonds of the Town; and

WHEREAS, such cost shall be annually apportioned and assessed upon the several lots and parcels of land within said Plainview Water District in the manner provided by law and levied and collected in an amount sufficient to pay the principal and interest on said bonds as the same become due;

WHEREAS, an environmental analysis has been prepared on behalf of the Plainview Water District pursuant to the regulations of the New York State Department of Environmental Conservation promulgated pursuant to the State Environmental Quality Review Act ("SEQRA") in connection with such increase and improvement and it has been determined by the District that such increase and

improvement of the facilities of said District and the use thereof constitute an "unlisted" action under SEQRA which will not result in any significant environmental effects; and

WHEREAS, the Town Board has reviewed the aforesaid environmental analysis and has concurred in the determination made under SEQRA by the District; and

WHEREAS, at a meeting of said Town Board duly called and held on October 29, 2019, an order was duly adopted by it and entered in the minutes specifying that said Town Board would meet to consider the increase and improvement of the Town of Oyster Bay Plainview Water District in said Town at an estimated maximum cost of $25,824,420 and to hear all persons interested in the subject thereof concerning the same at the Town Hall East, 54 Audrey Avenue, in Oyster Bay, New York, in said Town, on November 19, 2019 at 10:00 A.M., Prevailing Time; and

WHEREAS, said order duly certified by the Town Clerk was duly published and posted as required by law; and

WHEREAS, a public hearing was duly held at the time and place set forth in said notice, at which all persons desiring to be heard were duly heard; and NOW, THEREFORE, BE IT

ORDERED, by the Town Board of the Town of Oyster Bay, Nassau County, New York, as follows:

Section 1. Upon the evidence given at the aforesaid public hearing, it is hereby found and determined that it is in the public interest to increase and improve of the facilities of the Town of Oyster Bay Plainview Water District in said Town, consisting of the design, engineering, interim improvements and permanent construction of multi-year water treatment projects to treat contaminants, specifically 1,4-dioxane and per- and polyfluoroalkyl substances (PFAS), at Plants No. 2, 3, 4, and 7, including, but not limited to, the installation of Advanced Oxidative Process (AOP) treatment and Granular Activated Carbon (GAC) treatment, addition of a hydrogen peroxide system, monitoring equipment, construction of additional buildings to permanently house the GAC vessel and AOP reactor, and incidental expenses in connection therewith, at an estimated maximum cost of $25,824,420.

Section 2. This order shall take effect immediately.

The question of the adoption of the foregoing order was duly put to a vote on roll call, which resulted as follows:

Supervisor Saladino	VOTING	AYE
Councilman Muscarella	VOTING	AYE
Councilman Macagnone	VOTING	AYE
Councilwoman Johnson	VOTING	AYE
Councilman Imbroto	VOTING	AYE
Councilman Hand	VOTING	AYE
Councilman Labriola	VOTING	AYE

The order was thereupon declared duly adopted.

* * *

STATE OF NEW YORK)
).ss.:
COUNTY OF NASSAU)

I, the undersigned Clerk of the Town of Oyster Bay, Nassau County, New York, DO HEREBY CERTIFY:

That I have compared the annexed extract of the minutes of the meeting of the Town Board of said Town, including the order contained therein, held on November 19, 2019, with the original thereof on file in my office, and that the same is a true and correct transcript therefrom and of the whole of said original so far as the same relates to the subject matters therein referred to.

I FURTHER CERTIFY that all members of said Board had due notice of said meeting.

I FURTHER CERTIFY that, pursuant to Section 103 of the Public Officers Law (Open Meetings Law), said meeting was open to the general public.

I FURTHER CERTIFY that, PRIOR to the time of said meeting, I duly caused a public notice of the time and place of said meeting to be given to the following newspaper and/or other news media as follows:

Newspaper and/or Other News Media	Date Given
Various publications throughout the Town Of Oyster Bay	November 15, 2019

I FURTHER CERTIFY that PRIOR to the time of said meeting, I duly caused public notice of the time and place of said meeting to be conspicuously posted in the following designated public location(s) on the following dates:

Designated Location(s) of Posted Notice	Date of Posting
Bulletin board, 1st floor	November 15, 2019

IN WITNESS WHEREOF, I have hereunto set my hand and affixed the seal of said Town, on November 19, 2019.

Town Clerk

(SEAL)

10604814.____

At a regular meeting of the Town Board of the Town of Oyster Bay, Nassau County, New York, held at the Town Hall, Audrey Avenue, in Oyster Bay, New York, in said Town, on November 19, 2019 at 10:00 A.M., Prevailing Time.

The meeting was called to order by Supervisor Saladino, and upon roll being called, the following were

PRESENT: Supervisor Saladino
Councilman Muscarella
Councilman Macagnone
Councilwoman Johnson
Councilman Imbroto
Councilman Hand
Councilman Labriola

7348-19

ABSENT: No one.

The following resolution was offered by Councilman Muscarella who moved its adoption, seconded by Councilman Macagnone, to-wit:

Resolution No. 734B-2019

BOND RESOLUTION DATED NOVEMBER 19, 2019.

A RESOLUTION AUTHORIZING THE ISSUANCE OF $25,824,420 BONDS OF THE TOWN OF OYSTER BAY, NASSAU COUNTY, NEW YORK, TO PAY COSTS OF THE INCREASE AND IMPROVEMENT OF THE FACILITIES OF THE TOWN OF OYSTER BAY PLAINVIEW WATER DISTRICT IN THE TOWN OF OYSTER BAY, NASSAU COUNTY, NEW YORK.

WHEREAS, pursuant to the provisions heretofore duly had and taken in accordance with the provisions of Section 202-b of the Town Law, and more particularly an order dated November 19, 2019, said Town Board has determined it to be in the public interest to increase the facilities of the Town of Oyster Bay Plainview Water District in the Town of Oyster Bay, Nassau County, New York, at an estimated maximum cost of $25,824,420; and

WHEREAS, it is now desired to provide funding for such capital project; NOW, THEREFORE, BE IT

RESOLVED, by the Town Board of the Town of Oyster Bay, Nassau County, New York, as follows:

Section 1. For the class of objects or purposes of paying costs of the increase and improvement of the facilities of the Town of Oyster Bay Plainview Water District in said Town, consisting of the design, engineering, interim improvements and permanent construction of multi-year water treatment projects to treat contaminants, specifically 1,4-dioxane and per- and polyfluoroalkyl substances (PFAS), at Plants No. 2, 3, 4, and 7, including, but not limited to, the installation of Advanced Oxidative Process (AOP) treatment and Granular Activated Carbon (GAC) treatment, addition of a hydrogen peroxide system, monitoring equipment, construction of additional buildings to permanently house the GAC vessel and AOP reactor, and incidental expenses in connection therewith, there are hereby authorized to be issued $25,824,420 bonds of said Town pursuant to the provisions of the Local Finance Law.

Section 2. It is hereby determined that the estimated maximum cost of the aforesaid class of objects or purposes is $25,824,420 and that the plan for the financing thereof is by the issuance of the $25,824,420 bonds of said Town authorized to be issued pursuant to this bond resolution.

Section 3. It is hereby determined that the period of probable usefulness of the aforesaid class of objects or purposes is forty years, pursuant to subdivision one of paragraph a of Section 11.00 of the Local Finance Law. It is hereby further determined that the maximum maturity of the bonds herein authorized will exceed five years.

Section 4. Subject to the provisions of the Local Finance Law, the power to authorize the issuance of and to sell bond anticipation notes in anticipation of the issuance and sale of the bonds herein authorized, including renewals of such notes, is hereby delegated to the Supervisor, the chief fiscal officer. Such notes shall be of such terms, form and contents, and shall be sold in such manner, as may be prescribed by said Supervisor, consistent with the provisions of the Local Finance Law.

Section 5. The faith and credit of said Town of Oyster Bay, Nassau County, New York, are hereby irrevocably pledged to the payment of the principal of and interest on such obligations as the same respectively become due and payable. An annual appropriation shall be made in each year sufficient to pay the principal of and interest on such obligations becoming due and payable in such year. Such cost shall be annually apportioned and assessed upon the several lots and parcels of land within said Plainview Water District in the manner provided by law and levied and collected in an amount sufficient to pay the principal and interest on said bonds as the same become due.

Section 6. Such bonds shall be in fully registered form and shall be signed in the name of the Town of Oyster Bay, Nassau County, New York, by the manual or facsimile signature of the Supervisor and a facsimile of its corporate seal shall be imprinted or impressed thereon and may be attested by the manual or facsimile signature of the Town Clerk.

Section 7. The powers and duties of advertising such bonds for sale, conducting the sale and awarding the bonds, are hereby delegated to the Supervisor, who shall advertise such bonds for sale, conduct the sale, and award the bonds in such manner as he shall deem best for the interests of the Town; provided, however, that in the exercise of these delegated powers, he shall comply fully with the provisions of the Local Finance Law and any order or rule of the State Comptroller applicable to the sale of municipal bonds. The receipt of the Supervisor shall be a full acquittance to the purchaser of such bonds, who shall not be obliged to see to the application of the purchase money.

Section 8. All other matters, except as provided herein relating to such bonds, including determining whether to issue such bonds having substantially level or declining annual debt service and all matters related thereto, prescribing whether manual or facsimile signatures shall appear on said bonds, prescribing the method for the recording of ownership of said bonds, appointing the fiscal agent or agents for said bonds, providing for the printing and delivery of said bonds (and if said bonds are to be executed in the name of the Town by the facsimile signature of its Supervisor, providing for the manual countersignature of a fiscal agent or of a designated official of the Town), the date, denominations, maturities and interest payment dates, place or places of payment, and also including the consolidation with other issues, shall be determined by the Supervisor. It is hereby determined that it is to the financial advantage of the Town not to impose and collect from registered owners of such bonds any charges for mailing, shipping and insuring bonds transferred or exchanged by the fiscal agent, and, accordingly, pursuant to paragraph c of Section 70.00 of the Local Finance Law, no such charges shall be so collected by the fiscal agent. Such bonds shall contain substantially the recital of validity clause provided for in Section 52.00 of the Local Finance Law and shall otherwise be in such form and contain such recitals in addition to those required by Section 52.00 of the Local Finance Law, as the Supervisor shall determine.

Section 9. The validity of such bonds and bond anticipation notes may be contested only if:

(1) Such obligations are authorized for an object or purpose for which said Town is not authorized to expend money, or

(2) The provisions of law which should be complied with at the date of publication of this resolution are not substantially complied with,

and an action, suit or proceeding contesting such validity is commenced within twenty days after the date of such publication, or

(3) Such obligations are authorized in violation of the provisions of the Constitution.

Section 10. This resolution shall constitute a statement of official intent for purposes of Treasury Regulations Section 1.150 - 2. Other than as specified in this resolution, no monies are, or are reasonably expected to be, reserved, allocated on a long-term basis, or otherwise set aside with respect to the permanent funding of the object or purpose described herein.

Section 11. This resolution, which is effective immediately pursuant to Section 35.00(b)(2) of the Local Finance Law, shall be published in summary in Newsday, a newspaper having general circulation in said Town, together with a notice of the Town Clerk in substantially the form provided in Section 81.00 of the Local Finance Law.

The question of the adoption of the foregoing resolution was duly put to a vote on roll call, which resulted as follows:

Supervisor Saladino	VOTING	AYE
Councilman Muscarella	VOTING	AYE
Councilman Macagnone	VOTING	AYE
Councilwoman Johnson	VOTING	AYE
Councilman Imbroto	VOTING	AYE
Councilman Hand	VOTING	AYE
Councilman Labriola	VOTING	AYE

The resolution was thereupon declared duly adopted.

* * *

STATE OF NEW YORK)
) ss.:
COUNTY OF NASSAU)

I, the undersigned Clerk of the Town of Oyster Bay, Nassau County, New York, DO HEREBY CERTIFY:

That I have compared the annexed extract of the minutes of the meeting of the Town Board of said Town, including the resolution contained therein, held on November 19, 2019, with the original thereof on file in my office, and that the same is a true and correct transcript therefrom and of the whole of said original so far as the same relates to the subject matters therein referred to.

I FURTHER CERTIFY that all members of said Board had due notice of said meeting.

I FURTHER CERTIFY that, pursuant to Section 103 of the Public Officers Law (Open Meetings Law), said meeting was open to the general public.

I FURTHER CERTIFY that, PRIOR to the time of said meeting, I duly caused a public notice of the time and place of said meeting to be given to the following newspaper and/or other news media as follows:

Newspaper and/or Other News Media	Date Given
Various publications throughout the Town Of Oyster Bay	November 15, 2019

I FURTHER CERTIFY that PRIOR to the time of said meeting, I duly caused public notice of the time and place of said meeting to be conspicuously posted in the following designated public location(s) on the following dates:

Designated Location(s) of Posted Notice	Date of Posting
Bulletin board, 1st floor 54 Audrey Avenue, Oyster Bay, NY 11771	November 15, 2019

IN WITNESS WHEREOF, I have hereunto set my hand and affixed the seal of said Town, on November 19, 2019.

Town Clerk

(SEAL)

Meeting of November 19, 2019 Resolution No. 735-2019

Reviewed By Office of Town Attorney

WHEREAS, the Town of Oyster Bay is engaged in litigation with the United States Government and the State of New York in connection with the Town's "Golden Age" and "Next Generation" housing programs and is represented by outside counsel in those matters; and

WHEREAS, Joseph Nocella, Town Attorney, and Matthew M. Rozea, Deputy Town Attorney, by memorandum dated November 19, 2019, advised that in an effort to achieve cost savings, the Town released a request for proposals that solicited responses from litigation firms that could serve as counsel; and

WHEREAS, all submitted proposals were reviewed in accordance with all applicable provisions of the Procurement Policy; and

WHEREAS, Messrs. Nocella and Rozea recommend that the Town Board authorize the retention of Sokoloff Stern, LLP, 179 Westbury Avenue, Carle Place, New York, in an amount not to exceed $35,000, with funds to be drawn from Account No. TWN OTA A 1420 44110 000 0000,

NOW, THEREFORE, BE IT RESOLVED, That the recommendation as hereinabove set forth is accepted and approved, and the firm Sokoloff Stern, LLP, 179 Westbury Avenue, Carle Place, New York is hereby retained for the purpose of representing the Town in connection with housing litigation; and be it further

RESOLVED, That the Comptroller is hereby authorized and directed to make payment, in an amount not to exceed $35,000, with funds to be drawn from Account No. OTA A 1420 44110 000 0000, upon submission of a duly certified claim, after audit.

-#-

The foregoing resolution was declared adopted after a poll of the members of the Board; the vote being recorded as follows:

Supervisor Saladino	Aye
Councilman Muscarella	Aye
Councilman Macagnone	Aye
Councilwoman Johnson	Aye
Councilman Imbroto	Aye
Councilman Hand	Aye
Councilman Labriola	Aye

735

Town of Oyster Bay
Inter-Departmental Memo

TO : Memorandum Docket

FROM : Office of the Town Attorney

DATE : November 19, 2019

SUBJECT: Authorization for the Retention of Special Counsel to the Town Attorney Housing Litigation

---

The Town of Oyster Bay is engaged in litigation with the United States Government and the State of New York in connection with the Town's "Golden Age" and "Next Generation" housing programs. Since 2013, the Town has been represented in these matters by outside counsel.

In an effort to achieve cost savings, the Town released a request for proposals that solicited responses from litigation firms that could serve as counsel. The request for proposals was sent directly to four (4) law firms and was also posted on the Town's website. A total of five (5) responses were received, as was one (1) declination letter by the deadline established in the request for proposals.

Each of the responses was reviewed in accordance with all applicable provisions of the Procurement Policy. Based upon that review, this Office recommends that the Town Board authorize the retention of Sokoloff Stern, LLP, 179 Westbury Avenue, Carle Place, New York. The firm's founding partner, Brian Sokoloff, has extensive experience litigating matters similar to that in which the Town is engaged, and is prepared to assume the Town's representation. Further, the firm has proposed rates that this Office finds eminently reasonable, which rates are found in the attached backup material. Funds in an amount not to exceed $35,000.00 are available in Account No. TWN OTA A 1420 44110 000 0000.

JOSEPH NOCELLA
TOWN ATTORNEY

Matthew M. Rozea
Deputy Town Attorney

MMR:mmr
Attachment

cc: Town Attorney (w/9copies)

S:\Attorney\RESOS 2019\MD & RESO\Housing Litigation Counsel MMR.docx

WHEREAS, pursuant to duly published notice, a public hearing was held before the Town Board on June 26, 2018, at 7:00 p.m., prevailing time, in the Hearing Room, Town Hall, East Building, 54 Audrey Avenue, Oyster Bay, New York, at which hearing all parties interested were given an opportunity to be heard upon the question of the proposed contract between the Town of Oyster Bay, acting on behalf of the Glenwood-Glen Head Fire Protection District and New York American Water Company, Inc., and payment for same, for the period July 1, 2018 through December 31, 2018, for the rental of two hundred twenty-four (224) hydrants located within the Town's boundaries, which hydrants are owned and maintained by New York American Water Company, Inc., at a rental of Seven Hundred and Forty Eight and 62/100 ($748.62) Dollars per hydrant per annum, not to exceed $83,845.44; and

WHEREAS, following due deliberation, it was determined to be in the best interests of the residents of the Glenwood-Glen Head Fire Protection District to pay the New York American Water Company, Inc., for the rental of fire hydrants for the period July 1, 2018 through December 31, 2018,

NOW, THEREFORE, BE IT RESOLVED, That the Comptroller is authorized to remit payment to the New York American Water Company, Inc. for the rental of fire hydrants for the period July 1, 2018 through December 31, 2018, upon presentation of a duly certified claim therefor, after audit.

-#-

Reviewed By
Office of Town Attorney
Elizabeth A. Faughnan

The foregoing resolution was declared adopted after a poll of the members of the Board; the vote being recorded as follows:

Supervisor Saladino	Aye
Councilman Muscarella	Aye
Councilman Macagnone	Aye
Councilwoman Johnson	Aye
Councilman Imbroto	Aye
Councilman Hand	Aye
Councilman Labriola	Aye

10604814.____

At a regular meeting of the Town Board of the Town of Oyster Bay, Nassau County, New York, held at the Town Hall, Audrey Avenue, in said Town, on November 19, 2019, at 10:00 A.M., Prevailing Time.

PRESENT:

Joseph Saladino
Supervisor

Joseph Muscarella
Councilman

Anthony Macagnone
Councilman

Michele Johnson
Councilman

Louis Imbroto
Councilman

Thomas Hand
Councilman

Steve Labriola
Councilman

Reviewed By
Office of Town Attorney

In the Matter of the Increase and Improvement of the Facilities of the Town of Oyster Bay Jericho Water District in the Town of Oyster Bay, Nassau County, New York.	Resolution No. 675A-2019 PUBLIC INTEREST ORDER

WHEREAS, the Town Board of the Town of Oyster Bay, Nassau County, New York, has been presented with a petition, dated September 4, 2019, executed by a majority of the duly elected Water District Commissioners of the Jericho Water District on September 11, 2019, pursuant to Section 216 of the Town Law, requesting the increase and improvement of the facilities of the Jericho Water District in said Town, consisting of, but not limited to, the evaluation of alternatives to an

Advanced Oxidation Process ("AOP") water treatment for the Main Office Facility, a Packed Tower Aeration System ("PTAS") for treatment of volatile organic compounds at Wells 6 and 16, installation and replacement of a screen at Well 16, pilot testing of a proposed AOP water treatment system at Wells 9, 14, 25 and 26, and at Kirby Lane Facility, water main improvements, service connection gooseneck replacements, the rehabilitation of Jericho Tank, the rehabilitation of the Split Rock standpipe, the rehabilitation and replacement of well pump and motor at various sites, construction of a new 3-MG tank and booster station, and incidental expenses in connection therewith, and

WHEREAS, said District has prepared a map, plan and report, including an estimate of cost, relating to said increase and improvement of facilities of said Jericho Water District, in form and substance acceptable to the Town Board; and

WHEREAS, the map, plan and report is in the form of a report from D&B Engineers and Architects, P.C., engineers duly licensed in the State of New York, entitled "August 2019 Bond Report"; and

WHEREAS, the estimated maximum cost to said Jericho Water District of such increase and improvement of facilities is determined to be $72,255,817, of which $33,229,000 is to be borne by the Jericho Water District under a proposed issuance of up to $33,229,000 of bonds of the Town; and

WHEREAS, such $33,229,000 cost shall be annually apportioned and assessed upon the several lots and parcels of land within said Jericho Water District in the manner provided by law and levied and collected in an amount sufficient to pay the principal and interest on said bonds as the same become due;

WHEREAS, an environmental analysis has been prepared on behalf of the Jericho Water District pursuant to the regulations of the New York State Department of Environmental Conservation promulgated pursuant to the State Environmental Quality Review Act in connection with such increase and improvement and it has been determined that such increase and improvement will not result in any significant environmental effects; and

WHEREAS, at a meeting of said Town Board duly called and held on October 1, 2019, an order was duly adopted by it and entered in the minutes specifying the said Town Board would meet to consider the increase and improvement of the Town of Oyster Bay Jericho Water District in said Town at an estimated maximum cost of $72,255,817 under a proposed issuance of up to $33,229,000 of bonds of the Town and to hear all persons interested in the subject thereof concerning the same at the Town Hall East, 54 Audrey Avenue, in Oyster Bay, New York, in said Town, on October 29, 2019, at 10:00 A.M., Prevailing Time; and

WHEREAS, said order duly certified by the Town Clerk was duly published and posted as required by law; and

WHEREAS, a public hearing was duly held at the time and place set forth in said notice, at which all persons desiring to be heard were duly heard; and NOW, THEREFORE, BE IT

ORDERED, by the Town Board of the Town of Oyster Bay, Nassau County, New York, as follows:

Section 1. Upon the evidence given at the aforesaid public hearing, it is hereby found and determined that it is in the public interest to increase and improvement of the facilities of the Town of Oyster Bay Jericho Water District in said Town, consisting of, but not limited to, the evaluation of alternatives to an Advanced Oxidation Process ("AOP") water treatment for the Main Office Facility, a Packed Tower Aeration System ("PTAS") for treatment of volatile organic compounds at Wells 6 and 16, installation and replacement of a screen at Well 16, pilot testing of a proposed AOP water treatment system at Wells 9, 14, 25 and 26, and at Kirby Lane Facility, water main improvements, service connection gooseneck replacements, the rehabilitation of Jericho Tank, the rehabilitation of the Split Rock standpipe, the rehabilitation and replacement of well pump and motor at various sites, construction of a new 3-MG tank and booster station, and incidental expenses in connection therewith, at an estimated maximum cost of $72,255,817 under a proposed issuance of up to $33,229,000 of bonds of the Town.

Section 2. This order shall take effect immediately.

The question of the adoption of the foregoing order was duly put to a vote on roll call, which resulted as follows:

Supervisor Saladino	VOTING	AYE
Councilman Muscarella	VOTING	AYE
Councilman Macagnone	VOTING	AYE
Councilwoman Johnson	VOTING	AYE
Councilman Imbroto	VOTING	AYE
Councilman Hand	VOTING	AYE
Councilman Labriola	VOTING	AYE

The order was thereupon declared duly adopted.

* * *

STATE OF NEW YORK)
).ss.:
COUNTY OF NASSAU)

I, the undersigned Clerk of the Town of Oyster Bay, Nassau County, New York, DO HEREBY CERTIFY:

That I have compared the annexed extract of the minutes of the meeting of the Town Board of said Town, including the order contained therein, held on October 29, 2019, with the original thereof on file in my office, and that the same is a true and correct transcript therefrom and of the whole of said original so far as the same relates to the subject matters therein referred to.

I FURTHER CERTIFY that all members of said Board had due notice of said meeting.

I FURTHER CERTIFY that, pursuant to Section 103 of the Public Officers Law (Open Meetings Law), said meeting was open to the general public.

I FURTHER CERTIFY that, PRIOR to the time of said meeting, I duly caused a public notice of the time and place of said meeting to be given to the following newspaper and/or other news media as follows:

Newspaper and/or Other News Media	Date Given
Various Publications throughout the Town of Oyster Bay	October 25, 2019

I FURTHER CERTIFY that PRIOR to the time of said meeting, I duly caused public notice of the time and place of said meeting to be conspicuously posted in the following designated public location(s) on the following dates:

Designated Location(s) of Posted Notice	Date of Posting
Bulletin board, 1st floor 54 Audrey Avenue, Oyster Bay, NY 11771	October 25, 2019

IN WITNESS WHEREOF, I have hereunto set my hand and affixed the seal of said Town, on November 19, 2019.

DEP. Town Clerk

(SEAL)

10604814.____

At a regular meeting of the Town Board of the Town of Oyster Bay, Nassau County, New York, held at the Town Hall, Audrey Avenue, in Oyster Bay, New York, in said Town, on November 19, 2019, at 10:00 A.M., Prevailing Time.

The meeting was called to order by Supervisor Saladino, and upon roll being called, the following were

PRESENT: Supervisor Saladino
Councilman Muscarella
Councilman Macagnone
Councilwoman Johnson
Councilman Imbroto
Councilman Hand
Councilman Labriola

675B-19

ABSENT: No one.

The following resolution was offered by Councilman Muscarella who moved its adoption, seconded by Councilman Macagnone, to-wit:

Resolution No. 675B-2019

BOND RESOLUTION DATED NOVEMBER 19, 2019.

A RESOLUTION AUTHORIZING THE ISSUANCE OF $33,229,000 BONDS OF THE TOWN OF OYSTER BAY, NASSAU COUNTY, NEW YORK, TO PAY A PORTION OF THE $72,255,817 ESTIMATED MAXIMUM COSTS OF THE INCREASE AND IMPROVEMENT OF THE FACILITIES OF THE TOWN OF OYSTER BAY JERICHO WATER DISTRICT IN THE TOWN OF OYSTER BAY, NASSAU COUNTY, NEW YORK.

WHEREAS, pursuant to the provisions heretofore duly had and taken in accordance with the provisions of Section 202-b of the Town Law, and more particularly an order dated October 29, 2019, said Town Board has determined it to be in the public interest to increase the facilities of the Town of Oyster Bay Jericho Water District in the Town of Oyster Bay, Nassau County, New York, at an estimated maximum cost of $72,255,817; and

WHEREAS, it is now desired to provide funding for such capital project; NOW, THEREFORE, BE IT

RESOLVED, by the Town Board of the Town of Oyster Bay, Nassau County, New York, as follows:

Section 1. For the class of objects or purposes of paying costs of the increase and improvement of the facilities of the Town of Oyster Bay Jericho Water District in said Town, consisting of, but not limited to, the evaluation of alternatives to an Advanced Oxidation Process ("AOP") water treatment for the Main Office Facility, a Packed Tower Aeration System ("PTAS") for treatment of volatile organic compounds at Wells 6 and 16, installation and replacement of a screen at Well 16, pilot testing of a proposed AOP water treatment system at Wells 9, 14, 25 and 26, and at Kirby Lane Facility, water main improvements, service connection gooseneck replacements, the rehabilitation of Jericho Tank, the rehabilitation of the Split Rock standpipe, the rehabilitation and replacement of well pump and motor at various sites, construction of a new 3-MG tank and booster station, and

Reviewed By
Office of Town Attorney

incidental expenses in connection therewith, there are hereby authorized to be issued $33,229,000 bonds of said Town pursuant to the provisions of the Local Finance Law.

Section 2. It is hereby determined that the estimated maximum cost of the aforesaid class of objects or purposes is $72,255,817 and that the plan for the financing thereof is by the issuance of the $33,229,000 bonds of said Town authorized to be issued pursuant to this bond resolution.

Section 3. It is hereby determined that the period of probable usefulness of the aforesaid class of objects or purposes is forty years, pursuant to subdivision one of paragraph a of Section 11.00 of the Local Finance Law.

Section 4. Subject to the provisions of the Local Finance Law, the power to authorize the issuance of and to sell bond anticipation notes in anticipation of the issuance and sale of the bonds herein authorized, including renewals of such notes, is hereby delegated to the Supervisor, the chief fiscal officer. Such notes shall be of such terms, form and contents, and shall be sold in such manner, as may be prescribed by said Supervisor, consistent with the provisions of the Local Finance Law.

Section 5. The faith and credit of said Town of Oyster Bay, Nassau County, New York, are hereby irrevocably pledged to the payment of the principal of and interest on such obligations as the same respectively become due and payable. An annual appropriation shall be made in each year sufficient to pay the principal of and interest on such obligations becoming due and payable in such year. Such cost shall be annually apportioned and assessed upon the several lots and parcels of land within such Jericho Water District in the manner provided by law and levied and collected in an amount sufficient to pay the principal and interest on said bonds as the same become due.

Section 6. Such bonds shall be in fully registered form and shall be signed in the name of the Town of Oyster Bay, Nassau County, New York, by the manual or facsimile signature of the Supervisor and a facsimile of its corporate seal shall be imprinted or impressed thereon and may be attested by the manual or facsimile signature of the Town Clerk.

Section 7. The powers and duties of advertising such bonds for sale, conducting the sale and awarding the bonds, are hereby delegated to the Supervisor, who shall advertise such bonds for sale, conduct the sale, and award the bonds in such manner as he shall deem best for the interests of the Town; provided, however, that in the exercise of these delegated powers, he shall comply fully with the provisions of the Local Finance Law and any order or rule of the State Comptroller applicable to the sale of municipal bonds. The receipt of the Supervisor shall be a full acquittance to the purchaser of such bonds, who shall not be obliged to see to the application of the purchase money.

Section 8. All other matters, except as provided herein relating to such bonds, including determining whether to issue such bonds having substantially level or declining annual debt service and all matters related thereto, prescribing whether manual or facsimile signatures shall appear on said bonds, prescribing the method for the recording of ownership of said bonds, appointing the fiscal agent or agents for said bonds, providing for the printing and delivery of said bonds (and if said bonds are to be executed in the name of the Town by the facsimile signature of its Supervisor, providing for the manual countersignature of a fiscal agent or of a designated official of the Town), the date, denominations, maturities and interest payment dates, place or places of payment, and also including the consolidation with other issues, shall be determined by the Supervisor. It is hereby determined that it is to the financial advantage of the Town not to impose and collect from registered owners of such bonds any charges for mailing, shipping and insuring bonds transferred or exchanged by the fiscal agent, and, accordingly, pursuant to paragraph c of Section 70.00 of the Local Finance Law, no such charges shall be so collected by the fiscal agent. Such bonds shall contain substantially the recital of validity clause provided for in Section 52.00 of the Local Finance Law and shall otherwise be in such form and contain such recitals in addition to those required by Section 52.00 of the Local Finance Law, as the Supervisor shall determine.

Section 9. The validity of such bonds and bond anticipation notes may be contested only if:

(1) Such obligations are authorized for an object or purpose for which said Town is not authorized to expend money, or

(2) The provisions of law which should be complied with at the date of publication of this resolution are not substantially complied with,

and an action, suit or proceeding contesting such validity is commenced within twenty days after the date of such publication, or

(3) Such obligations are authorized in violation of the provisions of the Constitution.

Section 10. This resolution shall constitute a statement of official intent for purposes of Treasury Regulations Section 1.150 - 2. Other than as specified in this resolution, no monies are, or are reasonably expected to be, reserved, allocated on a long-term basis, or otherwise set aside with respect to the permanent funding of the object or purpose described herein.

Section 11. This resolution, which is effective immediately pursuant to Section 35.00(b)(2) of the Local Finance Law, shall be published in summary in Newsday, a newspaper having general circulation in said Town, together with a notice of the Town Clerk in substantially the form provided in Section 81.00 of the Local Finance Law.

The question of the adoption of the foregoing resolution was duly put to a vote on roll call, which resulted as follows:

Supervisor Saladino	VOTING	AYE
Councilman Muscarella	VOTING	AYE
Councilman Macagnone	VOTING	AYE
Councilwoman Johnson	VOTING	AYE
Councilman Imbroto	VOTING	AYE
Councilman Hand	VOTING	AYE
Councilman Labriola	VOTING	AYE

The resolution was thereupon declared duly adopted.

* * *

STATE OF NEW YORK)
) ss.:
COUNTY OF NASSAU)

I, the undersigned Clerk of the Town of Oyster Bay, Nassau County, New York, DO HEREBY CERTIFY:

That I have compared the annexed extract of the minutes of the meeting of the Town Board of said Town, including the resolution contained therein, held on October 29, 2019, with the original thereof on file in my office, and that the same is a true and correct transcript therefrom and of the whole of said original so far as the same relates to the subject matters therein referred to.

I FURTHER CERTIFY that all members of said Board had due notice of said meeting.

I FURTHER CERTIFY that, pursuant to Section 103 of the Public Officers Law (Open Meetings Law), said meeting was open to the general public.

I FURTHER CERTIFY that, PRIOR to the time of said meeting, I duly caused a public notice of the time and place of said meeting to be given to the following newspaper and/or other news media as follows:

Newspaper and/or Other News Media	Date Given
various publications throughout the Town of Oyster Bay	October 25, 2019

69699068.1

I FURTHER CERTIFY that PRIOR to the time of said meeting, I duly caused public notice of the time and place of said meeting to be conspicuously posted in the following designated public location(s) on the following dates:

Designated Location(s) of Posted Notice	Date of Posting
Bulletin board, 1st floor 54 Audrey Avenue, Oyster Bay, NY 11771	October 25, 2019

IN WITNESS WHEREOF, I have hereunto set my hand and affixed the seal of said Town, on November 19, 2019.

Town Clerk

(SEAL)